MCAC610/825/845/8A0-23B Servo Motor Driver

User's Manual

Address: No.27-2, 3rd Building, Neo-China Top City, No.1 Aoti Road, Yuanjiagang, Jiulongpo District, Chongqing, China

Tel: +86-023-68438829

E-mail:support@oyostepper.com

https://www.oyostepper.com

Preface

Foreword 2
I.Precaution 6
1.1 Reception and installation precautions 6
1.2 Wiring precautions 6
1.3 Operation and operation precautions 7
1.4 Maintenance and inspection precautions 8
II. Product Introduction
2.1 summarize 8
2.2 characteristic 9
2.3 drive specification 9
2.4 Servo driver model description and nameplate content 12
1. Model description: 12
III. Port Description and Definition 13
3.1 Drive port schematic 13
3.2 Driver CN1 Control Signal Input Port 16
3.3 Driver CN2 Encoder Interface Description 17
3.4 Driver CN1 Power, Motor Cable Port 18
3.6 Drive CN5 Port Description 20
IV. Installation instructions 21
4.1 Installation size 21
4.2 Installation and use environment 22
V. Instructions for operation and use of keypad 23
5.1 Introduction to the functions of each part of the panel 23
5.2 Operation Mode Switching Flow 24
5.3 status display 25
5.4 Parameter setting writing and saving method 27
VI. Control Mode and Setting 28
6.1 positioning control 28

6.2 speed control 34
6.3 torque control 36
VII. Trial Operation and Parameter Adjustment 38
7.1 Commissioning 38
7.2 parameter adjustment 42
7.3 manual gain adjustment 43
VIII. Parameters and Functions 56
8.1 Parameter list 56
8.2 parameter specification 57
8.3 List of monitoring items 96
8.4 miscellaneous function 100
IX. Fault Analysis and Handling 104
9.1 Fault alarm information table 104
9.2 Fault alarm cause and disposal 106
X. Communication 121
10.1 Modbus communication parameter setting 121
10.2 Modbus communication supports reading and writing parameter setting 122
10.3 Modbus communication protocol overview 125
10.4 function number 126
10.5 dead-time 130
10.6 Response to Exception Program 131
XI. Special Functions 132
11.1 absolute encoder usage 132

I. Precaution

In order to prevent personal and property safety hazards, please observe the following precautions and make the following marks to distinguish them:

risk	indicates a high likelihood of death or serious injury.
atte ntion	Indicates a high likelihood of causing minor injuries or endangering property
	Indicates prohibited implementation

1.1 Reception and installation precautions

Danger:

1. Please use the driver and motor in the specified way, otherwise it will cause equipment damage or cause fire.
2. It is forbidden to use it in places with severe water vapor, flammable gas, corrosive gas, etc., otherwise it will cause electric shock, fire, equipment damage, etc.

1.2 Wiring precautions

Danger: 1. Do not connect the driver power supply to the U, V, W motor output terminals, otherwise the driver will be damaged, which may cause personal injury or fire.

2. Please confirm that the connecting wires of the power supply and motor output terminals are locked tightly, otherwise it may cause sparks and cause fire.

3. Please select the power cord and motor power extension cord correctly to avoid fire caused by insufficient current bearing capacity of the wire.

4. Please confirm that the drive housing and motor are grounded. Poor grounding may cause electric shock.

Note: 1. Please do not tie the motor power line and signal line together or pass through the same pipeline to prevent interference with the signal.

2, signal line, encoder feedback extension line, please use multi-stranded shielded line, strengthen anti-interference ability.

3. Before power-on, please confirm whether each wiring is connected correctly.

1.3 Operation and operation precautions

Danger: 1, before the equipment installation, please first no-load test run, to avoid accidents.

2. Do not let untrained personnel operate to prevent equipment damage and personnel injury caused by misoperation.

3. During normal operation, please do not touch the radiator and its interior with your hands to prevent high temperature burns or electric shocks.

Note: 1, please adjust the driver parameters, and then long-term test, to prevent the use of poor drivers and equipment.

2, please confirm that the equipment start, emergency stop, close and other switches are effective to run the equipment.

3. Please do not switch the power supply frequently.

1.4 Maintenance and inspection precautions

1. During operation, it is forbidden to touch the inside of the driver and motor to prevent electric shock.

2、 Do not change the connecting wire under the condition of power supply, so as to prevent electric shock or personal injury.

3、 Operation and routine maintenance must be carried out by trained professionals.

4、 Do not disassemble or repair except by our company personnel.

II. Product introduction

2.1 Summarize

MCAC610/MCAC825/MCAC845/MCAC8A0-23B AC servo driver is a high-performance AC servo unit developed by JMC This series of servo drivers adopts advanced DSP chip for motor control and large-scale programmable gate array (FPGA). It has the characteristics of small size, high integration, stable performance and reliable protection. It has rich digital and analog I/O interfaces, can be used with a variety of host computer devices, and supports Ether CAT (COE) communication protocol to facilitate networking. Through the optimized PID control algorithm, the position, speed and torque accuracy of the digital control, with high accuracy, fast response and other advantages. At the same time, it supports the absolute expressions of incremental encoders to meet different requirements for customer performance. Widely used in CNC machine tools, printing and packaging machinery, textile machinery, robots, automated production lines and other automation fields.

2.2 characteristic

1. Using DSP+FPGA dual-chip platform and optimized current loop design, the driver has the characteristics of high dynamic response, extremely short setting time, stable operation and small vibration when stopping.
2. With automatic gain adjustment module, users can choose the rigidity level according to their needs.
3. Built-in FIR filter and multi-group notch filter can automatically identify and suppress mechanical vibration.
4. Built-in disturbance torque observer makes the driver have strong anti-external disturbance ability.
5, Ethernet communication port, support Ether CAT communication
6. Programmable 4-way INPUT and 3-way OUTPUT ports, users can customize input and output through parameter settings, and the application is flexible.
7. It has perfect protection functions such as overvoltage, undervoltage, overspeed, overload, excessive position deviation, encoder error, etc., and can remember 8 groups of historical fault information.
8, with a wealth of monitoring projects, the user can choose the desired monitoring project monitoring operation during the use process.
9. The driver can communicate with PC through USB interface to realize simple and fast debugging of servo drive system.

General application parameters do not need to be adjusted.

2.3 Drive specification

1. Electrical specifications

drive model	MCAC610	MCAC825	MCAC845	MCAC8A0
input voltage	DC24~60V	DC24~80V	DC24~80V	DC24~80V
Continuous Output	10A	25A	45A	100A

Current Arms				
Maximum Output Current Arms	20A	50A	90A	200A
maximum pulse frequency	500K			

2. Basic specifications

project		describe
control mode		IGBT PWM control sine wave current drive mode
feedback		Incremental encoder/multi-turn absolute encoder
service conditions	temperature	Working temperature: 0~55℃Storage temperature: -25~85℃
	humidity	Work: 10%~90%
	altitude	<1000m, higher than 1000 m, should be used in accordance with GB/T 3859.2-93 derating
	protection level	Protection class: IP10, cleanliness: 2 No corrosive gas, flammable gas No oil, no water splash An environment with less dust, salt and metal powder
performance	Speed adjustment range	1:5000
	the steady fast precision	±0.1%: external load variation 0~100% ±0.1%: ±10% power input variation (220V) ±0.1%: Ambient ±25℃ (25℃)
	velocity response frequency	1200Hz
	torque control	±2%

	accuracy	
	encoder divided pulse output	Phase A, Phase B, Phase C: Linear drive output Frequency division pulse number: can be arbitrarily set
	input signal	Points: 4 Function: servo ON, alarm clearing, forward overtravel signal input, reverse overtravel signal input, control mode switching, P action command input, gain switching input, zero fixed input, command pulse prohibition input, clockwise limit input, origin limit input, counterclockwise limit input, position command clearing input, command pulse input magnification switching input
	output signal	Points: 3 Function: alarm output, brake open output, servo ready output, positioning completion output, positioning approach output, speed limit detection output, warning output, command pulse input magnification switching output
communication function	RS485	Support MODBUS protocol. Axis address: set by parameters
	USB	Connect PC for debugging
retexture		not have
defensive function		Overvoltage, undervoltage, overcurrent, overload, etc.

2.4 Servo driver model description and nameplate content

1. Model description:

MC AC 6 10 - XX

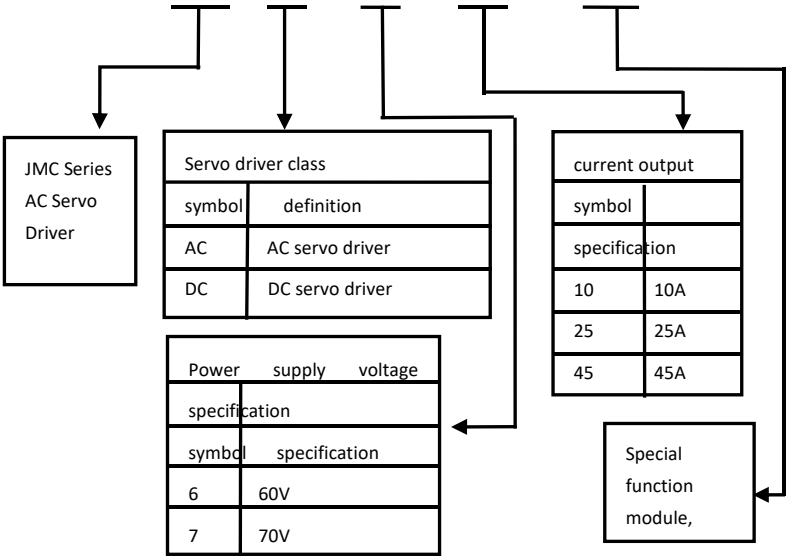

III. Port Description and Definition

3.1 Drive port schematic

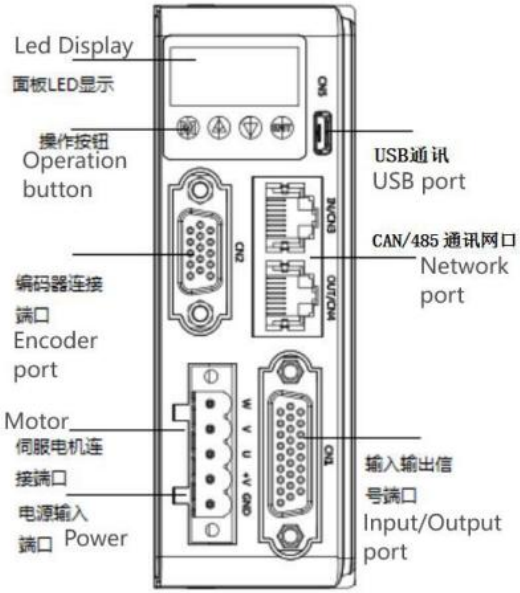

MCAC610 port schematic

MCAC610 port schematic

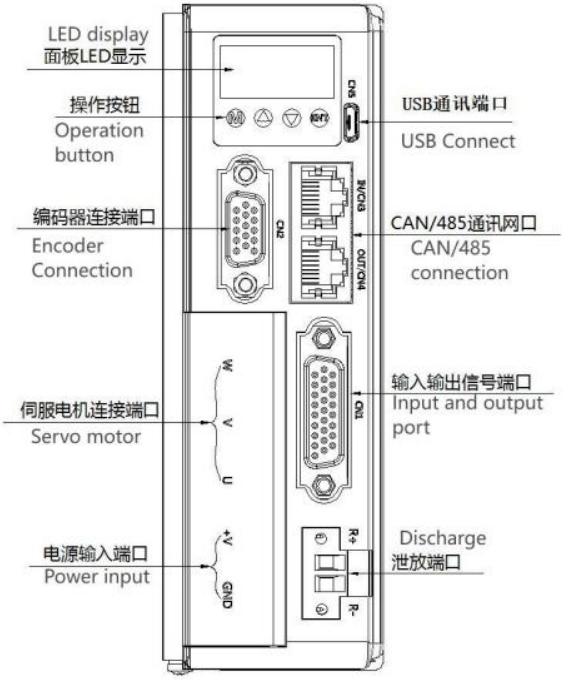

MCAC825/845 port schematic

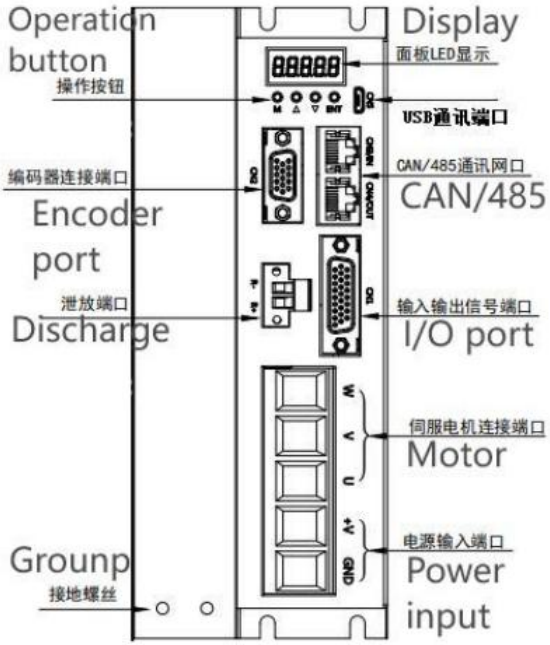

MCAC8A0 port schematic

MCAC8A0 port schematic

3.2 Driver CN1 Control Signal Input Port

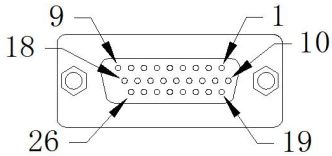

PIN number	grade	definition	note
1	COM+	common input	High 24V active
2	DI1-	DI1 Digital Input Negative	Custom input port (enabled by default)
3	PULS+	pulse positive	Input 3.3V-5VDC
4	PULS-	pulse negative	
5	SIGN+	direction positive	Input 3.3V-5VDC
6	SIGN-	direction negative	
7	DI2-	DI2 Digital Input Negative	Custom input ports
8	DO1+	Digital output positive	Custom output ports
9	DO1-	Digital Output Negative	Custom output ports
10	DO2+	Digital output positive	Custom output ports
11	DO2-	Digital Output Negative	Custom output ports
12	DO3+	Digital output positive	Custom output ports
13	DO3-	Digital Output Negative	Custom output ports
14	DI3-	DI3 Digital Input Negative	Custom input ports
15	DI4-	DI4 Digital Input Negative	Custom input ports
16	T_REF	torque analog positive	
17	V_REF	velocity analog positive	

18	OCZ	Encoder Z-phase open-collector output	
19	+15V	+15V output (for analog commands)	Maximum allowable output current: 50 mA
20	OA+	Encoder Phase A positive output	
21	OA-	Encoder A phase negative output	
22	OB+	Encoder B-phase positive output	
23	OB-	Encoder B-phase negative output	
24	OZ+	Encoder Z-phase positive output	
25	OZ-	Encoder Z-phase negative output	
26	GND	power ground	

3.3 Driver CN2 Encoder Interface Description

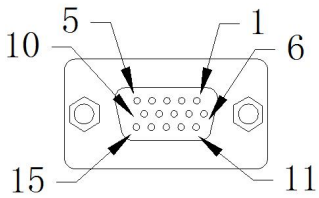

PIN number	grade	definition	note
1	GND	output power ground	
2	VCC	Output 5V power supply	

3	PW+	Pole W phase positive input	
4	PV+	Pole V-phase positive input	
5	PU+	Pole U-phase positive input	
6	PZ+	Encoder Z-phase positive input	
7	PB+	Encoder B-phase positive input	
8	PA+	Encoder Phase A positive input	
9	NC		
10	NC		
11	T+	Bus encoder T+	
12	T-	Bus encoder T-	
13	PZ-	Encoder Z-phase negative input	
14	PB-	Encoder Phase B Negative Input	
15	PA-	Encoder Phase A Negative Input	

3.4 Driver CN1 Power, Motor Cable Port

1、MCAC610

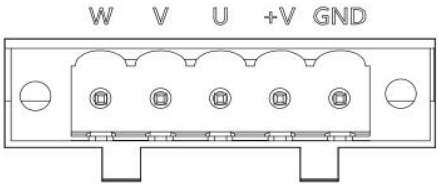

2、MCAC825/845

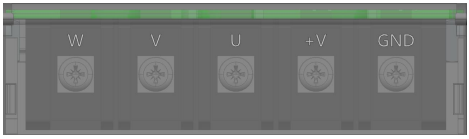

3、MCAC8A0

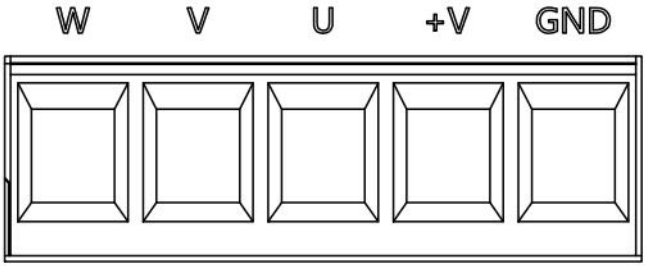

terminal number	the symbol	names	note
1	W	Motor W phase	Motor power line W phase
2	V	Motor V phase	Motor power line V phase
3	U	Motor U phase	Motor power line U phase
4	VDC	Input DC power positive	Power Input Positive
5	GND	Input power ground	Power Input Ground

3.5 Driver CN3/CN4 Port Description

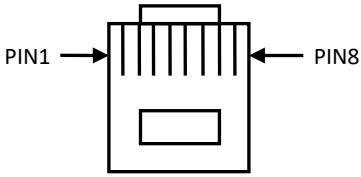

pin number	grade	Definition Description
PIN1	CANH	CNAH(bus servo only)

PIN2	CANL	CNAL(bus servo only)
PIN3	CGND	CGND(bus servo only)
PIN4	reserved	reserved
PIN5	reserved	reserved
PIN6	GND	land
PIN7	485-	485-
PIN8	485+	485+

3.6 Drive CN5 Port Description

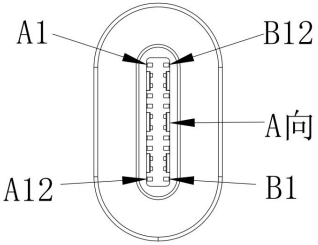

Note: TYPE-C interface is standard USB communication, use standard TYPE-C cable

IV. Installation instructions

4.1 Installation size

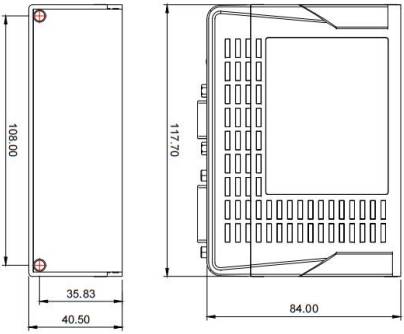

MCAC610 size drawing

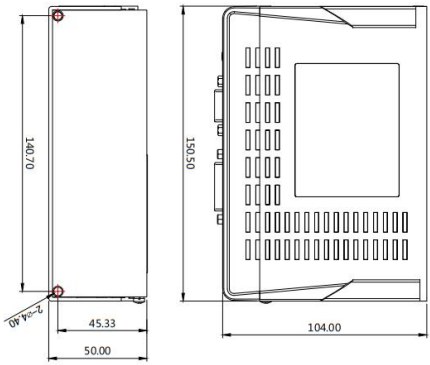

MCAC825/845 size drawing

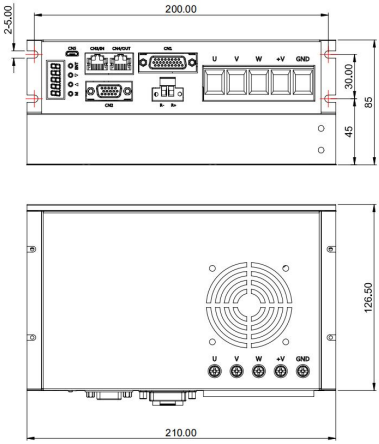

MCAC 8A0 size drawing

4.2 Installation and use environment

The installation and use environment has a direct impact on the normal operation and service life of the product, so the following conditions must be met:

1, working environment temperature: 0~55℃; working environment humidity: 10%~90% below (no condensation).

2, storage environment: -20℃~+85℃; storage environment humidity: 90% below (no condensation).

3. Vibration: below 0.5G.

4. Prevent rain dripping or humid environment.

5. Avoid exposure to sunlight.

6, to prevent oil mist, salt erosion.

7, to prevent corrosive liquids, gas, etc.

8. Prevent dust, cotton wool and metal fines from invading.

Keep away from radioactive substances and combustibles.

10. Space shall be reserved around the driver placement position in the cabinet to facilitate loading, unloading and maintenance.

11, pay attention to the air flow in the cabinet, if necessary, add an external fan to enhance air flow, reduce the ambient temperature of the driver to facilitate heat dissipation; long-term working temperature below 55℃.

12. Try to avoid vibration sources nearby and install shock absorbing devices such as vibration absorbers or anti-vibration rubber gaskets.

13. If there is an electromagnetic interference source nearby, the power supply and control circuit of the driver are susceptible to interference and cause malfunction. Noise filters can be added or various effective anti-interference measures can be adopted to ensure the normal operation of the driver (noise filter).

This increases leakage current and requires an isolation transformer at the driver power input).

V. Instructions for operation and use of keypad

5.1 Introduction to the functions of each part of the panel

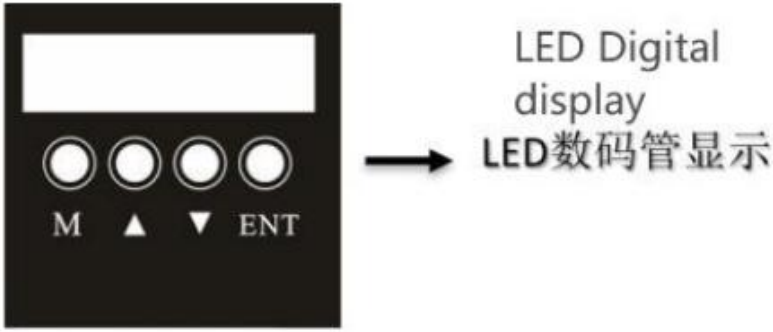

panel key label	definition	explain
M	M key	Function switching and withdrawal
△	UP key	Display change, value increase function
▽	DOWN key	Display change, value decrease function
ENT	ENT key	a. Long press OK or save function b. Short press is shift function (used to switch high/low position display in parameter mode)

Remarks:

a. ENT key press for 3 seconds to confirm or save the function.

b. Under the monitoring and parameter interface, press and hold the UP key or DOWN key to quickly flip.

5.2 Operation Mode Switching Flow

MCAC610/825/845/8A0 series AC servo has four function modes, namely status display mode, monitoring mode, parameter setting mode and auxiliary mode. The switching flow between them is as follows:

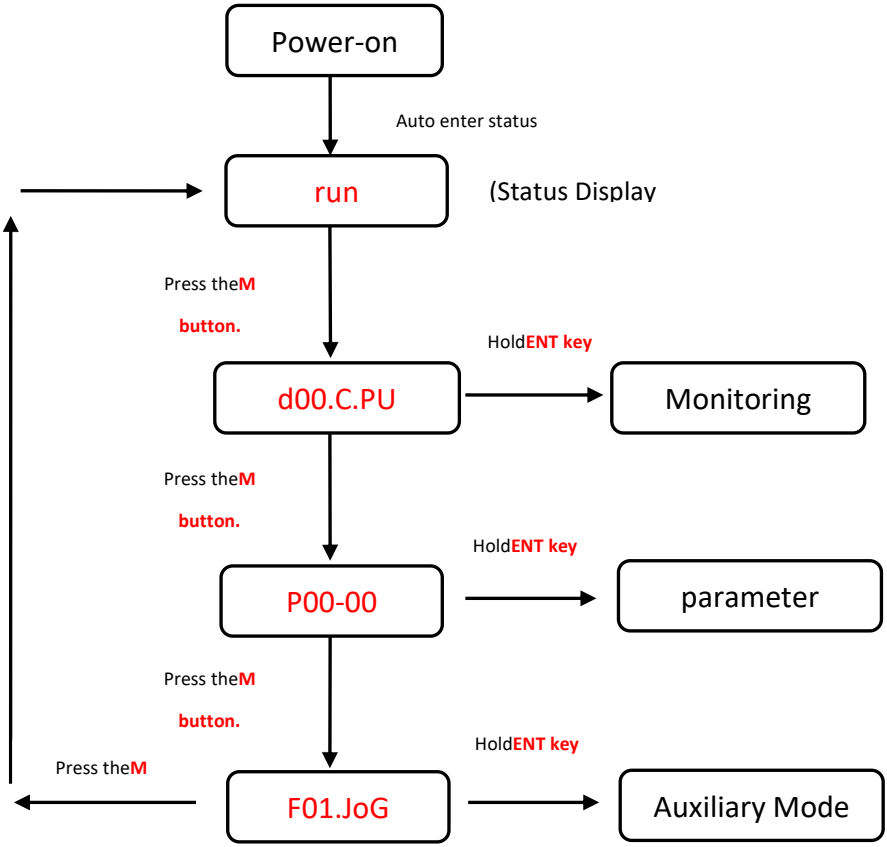

Note: After pressing ENT key to enter mode setting, you can exit mode selection by pressing M key.

5.3 status display

LED display

Status Display Bit Data Meaning

show	implication	show	implication
	Control loop power supply power-on display		Main circuit power ready display
	Speed, torque control: speed consistent display Position control: positioning complete display		rotation detection display
	base block display Servo OFF state lights up, ON state goes out		Speed, torque control: speed command input middle Position control: displayed in command pulse input

Status Display Abbreviations Meaning

show	implication

nrdy	Servo not ready (power supply not energized)
rdy	Servo ready (servo motor not energized)
run	Servo enable status (servo motor energized status)
Pot	It indicates that the input port of positive over travel signal is in effective state, and the motor positive rotation command is invalid.
not	Indicates that the reverse over travel signal input port is in an active state, and the motor reverse command is invalid.
FinSh	Servo correlation operation completed correctly
SY_on	Servo is enabled and cannot be operated. It must be turned off before operation.
no_oP	Invalid value entered, servo does not perform current operation
LocKd	The relevant parameters of servo are locked and can only be operated after unlocking.
AL.501	Servo fault display, please refer to Chapter IX for fault definition.

5.4 Parameter setting writing and saving method

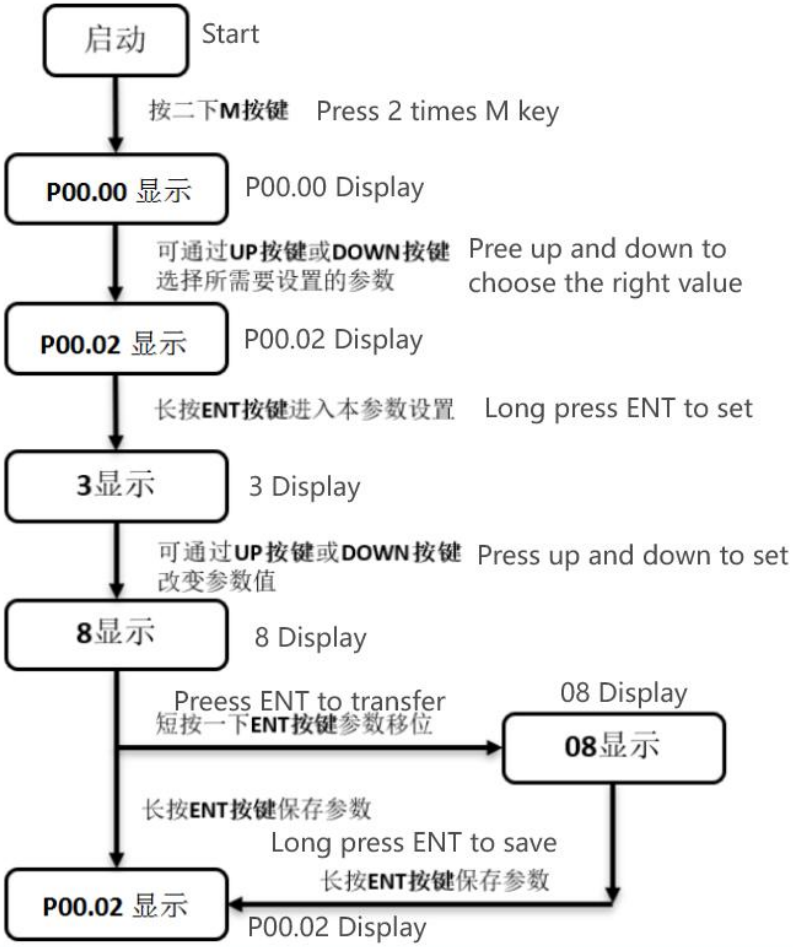

Parameter setting writing and saving process

Chapter VI Control Mode and Setting

6.1 positioning control

6.1.1 Position control wiring diagram

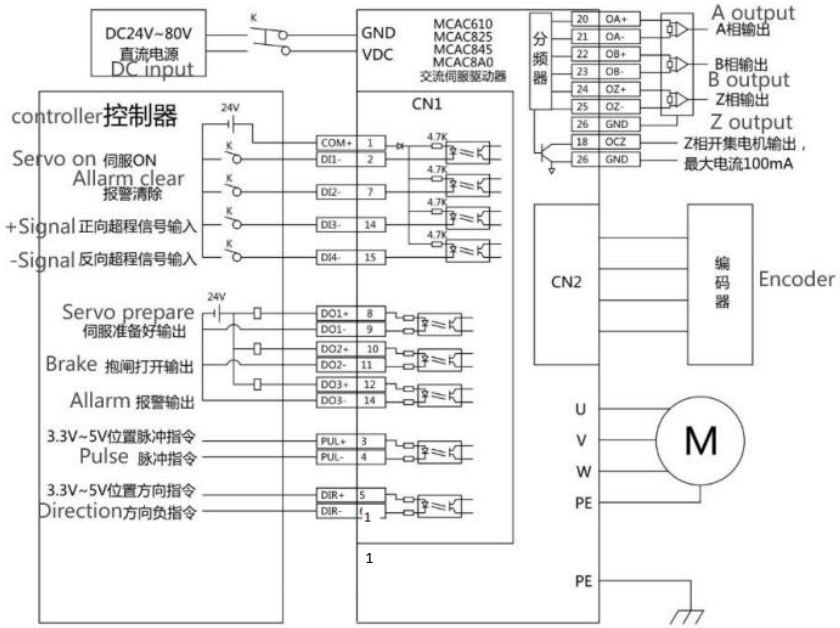

6.1.2 Schematic diagram of position control wiring

Direction + pulse input mode of controller terminal Description: Direction + pulse input is divided into: 3.3V, 5V, 24V signal input mode, using twisted pair connection, which can improve anti-interference ability. In general, microcontroller systems use this position control wiring method. The maximum input pulse frequency of this control mode is 500KHz.

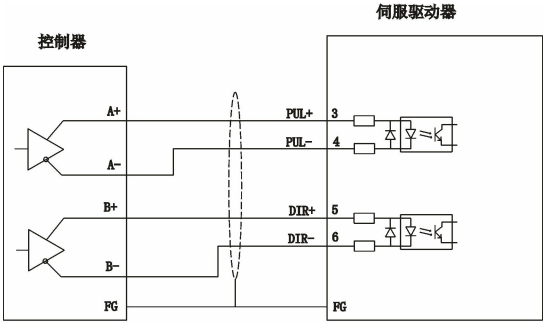

Controller-side open-collector input mode Description: Single-ended input mode can use the power supply provided internally by the driver, or can use an external power supply. However, dual power inputs should not be used to avoid damage to the drive. Under normal circumstances, PLC controller systems use this position control wiring method

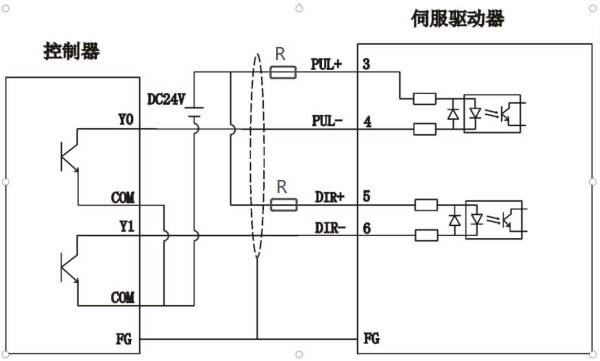

Note: When the direction and pulse are connected to 24V signal, it is necessary to connect 1K/1W to 1.5K/1W resistors in series, as shown in the above figure.

6.1.3 Position control mode parameter description

1、Motor and driver control parameters

parameter code	name	setting range	setting	explain
P01-01	control mode setting	0-5	0	0: Position mode 1: Speed mode 2: Torque mode 3: Speed, torque 4: Position, Speed 5: Position, torque
P03-00	Location Command Source	0-3	0	0: Pulse command 1: Reserved 2: Bus instruction 3: Built-in multi-stage position
P03-01.0	command pulse mode	0-3	1	0: Quadrature pulse command 1: direction + pulse command 2 or 3: double pulse command
P03-03.0	instruction pulse negation	0-1	0	instruction pulse negation
P03-09	Number of command pulses per revolution of motor	0-1073741822	10000	Set according to user requirements See**8.2 Parameter Description**
P03-40	Electronic Gear 1 Molecule	1-1073741822	64	Set according to user requirements See**8.2 Parameter**
P03-42	Denominator of electronic	1-1073741822	1	

	gear 1			**Description**
P03-15	Position deviation too large setting	0-1073741822	90000	Set according to user requirements
P03-25	Absolute value Number of pulses per revolution of motor	1-65535	2500	Set according to user requirements

2. Gain parameters

Please refer to the**parameter adjustment**in**Chapter 7** for adjustment.

6.1.4 Electronic gear ratio calculation example

1、ball screw transmission

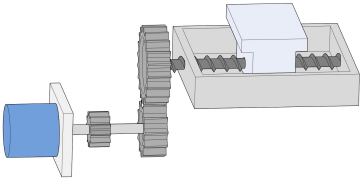

Assumptions:

(1) Mechanical parameters: reduction ratio R is 2/1, screw lead is 10mm

(2) Absolute encoder position ring resolution per turn:8388608

(3) Load displacement corresponding to 1 position command (command unit): 0.001mm

Then:

From (1) and (3), the position command (command unit) value required for 1 rotation of the screw (10mm movement of the table) can be obtained:

$$\frac{10}{0.001}=10000$$

The electronic gear ratio is: (B is numerator, A is denominator)

$$\frac{B}{A} = \frac{8388608}{10000} \times \frac{2}{1} = \frac{1048576}{625}$$

The final parameter P03-40 is set to 1048576 and P03-42 to 625

2、belt pulley transmission

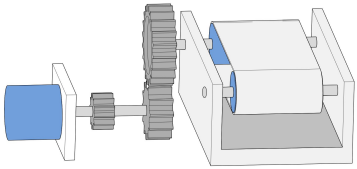

Assumptions:

(1) Mechanical parameters: reduction ratio R: 5/1, pulley diameter: 0.2m(pulley circumference: 0.628m)

(2) Absolute encoder position ring resolution per turn:8388608

(3) Load displacement corresponding to 1 position command (command unit): 0.00005m

Then:

From (1) and (3), the position command (command unit) value required for 1 revolution of pulley (load) can be obtained:

$$\frac{0.628}{0.000005} = 125600$$

The electronic gear ratio is: (B is numerator, A is denominator)

$$\frac{B}{A} = \frac{8388608}{125600} \times \frac{5}{1} = \frac{262144}{785}$$

The final parameter P03-40 is set to 262144 and P03-42 to 785

3、rotational load

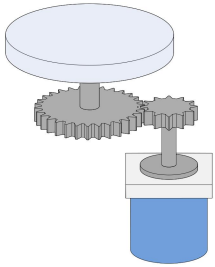

Assumptions:

(1) Mechanical parameters: reduction ratio R is 10/1, rotation angle of load shaft is 360° for 1 turn

(2) Absolute encoder position ring resolution per turn:8388608

(3) Load displacement corresponding to 1 position command (command unit): 0.01°

Then:

From (1) and (3), the position command (command unit) value required for 1 rotation of the load can be obtained:

$$\frac{360}{0.01}=36000$$

The electronic gear ratio is: (B is numerator, A is denominator)

$$\frac{B}{A}=\frac{8388608}{36000}\times\frac{10}{1}=\frac{524288}{225}$$

The final parameter P03-40 is set to 524288 and P03-42 to 225

Note: If the position command value required for calculating 1 rotation is an integer, it is recommended to directly set P03-09(the number of command pulses for 1 rotation of the motor).

6.2 speed control

6.2.1 speed control wiring diagram

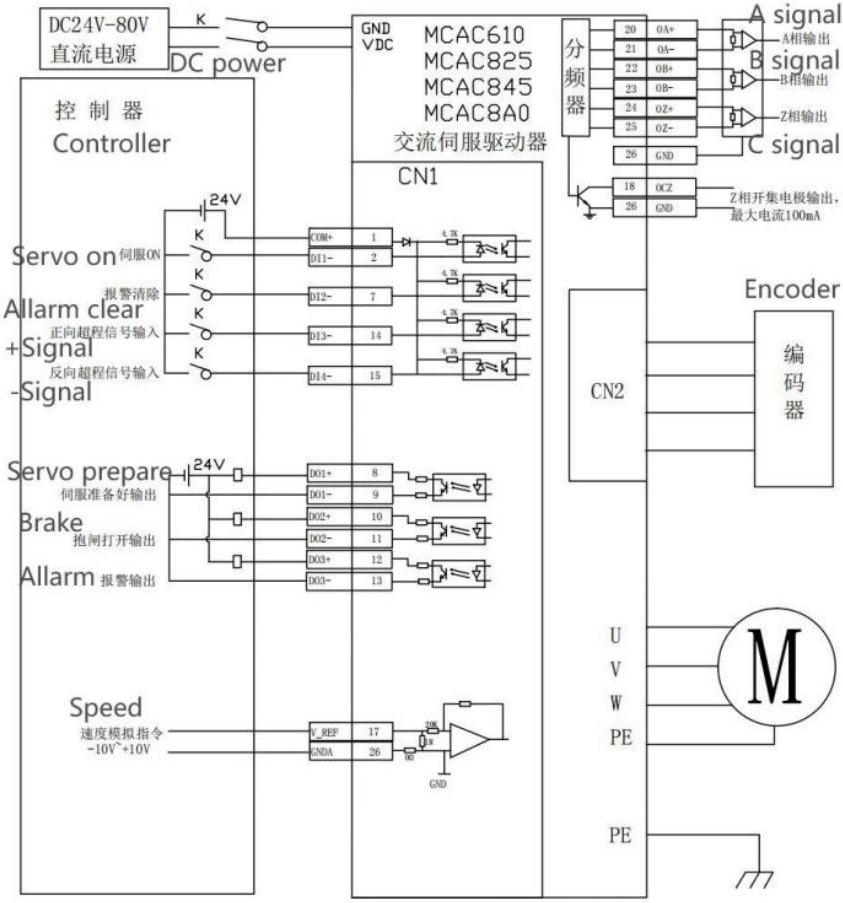

6.2.2 Speed Control Mode Parameter Description

1、Motor and driver control parameters

parameter code	name	setting range	setting	explain
P01-01	control mode setting	0-5	1	0: Position mode 1: Speed mode 2: Torque mode 3: Speed, torque 4: Position, Speed 5: Position, torque
P04-00	speed command source	0-3	0	0: External analog command 1: Setpoint for P04-02 2: Bus instruction 3: Internal multi-stage speed
P04-02	digital speed setpoint	-6000-6000	0	When P04-00 is set to 1, P04-02 is the speed setpoint
P04-06	forward speed limit	0-6300	6000	limiting forward speed
P04-07	reverse speed limit	-6300-0	-6000	limit reverse speed
P06-05.0	speed analog command selection	0-1	0	Select AI1 interface as input
P06-40	Speed analog command input gain	10-2000	300	Set according to user requirements See**8.2 Parameter Description**

2. Gain parameters

Please refer to the**parameter adjustment**in**Chapter 7** for adjustment.

6.3 torque control

6.3.1 Torque Control Wiring Diagram

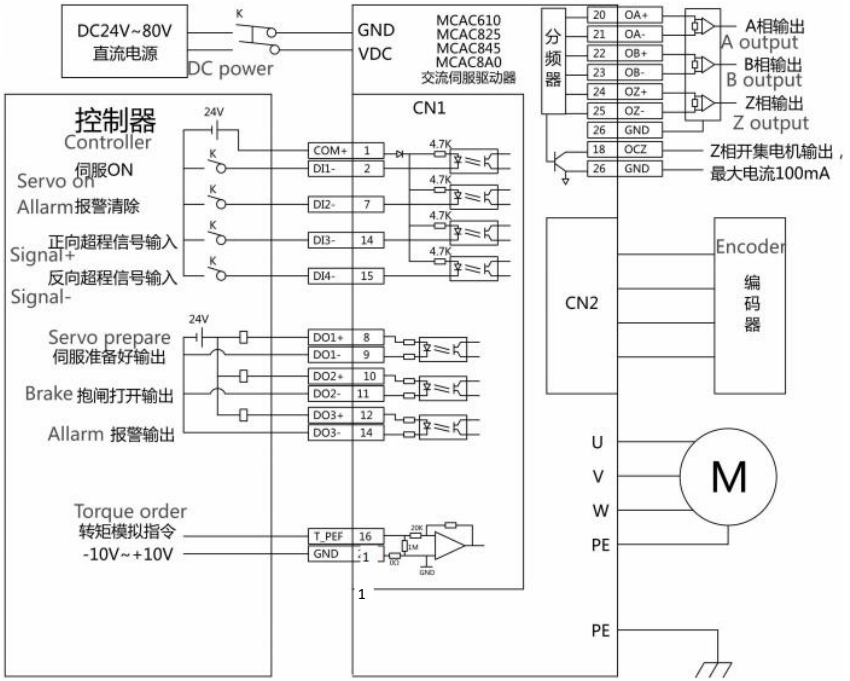

6.3.2 Torque Control Mode Parameter Description

1、Motor and driver control parameters

parameter code	name	setting range	setting	explain
P01-01	control mode setting	0-5	2	0: Position mode 1: Speed mode 2: Torque mode 3: Speed, torque 4: Position, Speed 5: Position, torque
P05-00	torque command source	0-3	0	0: analog command 1: Setpoint for P05-03 2: Bus instruction 3: Built-in multi-stage torque
P05-01	Speed Limit Source Settings	0-3	1	0: Speed analog command 1: Setpoint for P05-02 2: Bus instruction 3: Built-in multi-stage speed
P05-02	Torque mode speed limit setpoint	0-6000	1000	Set the maximum speed of the motor in torque mode. Effective when P05-01 is 1
P05-10	internal forward torque limit	0-300	200	Limit forward torque values
P05-11	Internal Reverse Torque Limiting	-300-0	-200	limit reverse torque value
P06-05.1	torque analog command selection	0-1	1	Select AI1 interface as input
P06-43	Torque analog command input gain	0-100	10	Set according to user requirements See**8.2 Parameter Description**

2. Torque control command related gain parameters

Please refer to the**parameter adjustment**in**Chapter 7** for adjustment.

Chapter VII Trial Operation and Parameter Adjustment

7.1 Commissioning

7.1.1 pre-run test

In order to avoid damage to the servo driver or mechanism, please remove all loads of the servo motor before operation, and carefully check whether the following precautions are normal, and then power-on for no-load test; after the no-load test is normal, the load of the servo motor can be connected for the next test.

Notes:

Test before power-on	1、 Check servo drive for visible cosmetic damage 2、 Insulation treatment shall be applied to the connection part of wiring terminal 3、 Check for foreign objects inside the drive 4、 Servo drives, motors and external regenerative resistors must not be placed on combustible objects 5、 In order to avoid electromagnetic brake failure, please check whether the power supply circuit can work normally by stopping and cutting off immediately. 6、 Confirm whether the external power supply voltage of servo driver meets the requirements 7、 Confirm whether the motor U, V, W power line, encoder line and signal line are connected correctly (label and manual

	confirmation)
Detection at power-on	1、 Servo driver power indicator and LED display is normal 2、 Confirm whether all parameters are set correctly. Unexpected actions may occur depending on mechanical characteristics. Do not adjust parameters excessively 3、 Whether servo motor is self-locking 4、 If the servo motor vibrates and makes excessive noise during operation, please contact the manufacturer.

7.1.2 no-load commissioning test

1. JoG mode no-load test run test, users can not need to connect additional wiring, for safety reasons, JoG no-load speed test before, please fix the motor base, in case of motor speed changes caused by the reaction force caused by danger. The following is a simple wiring diagram in JoG mode:

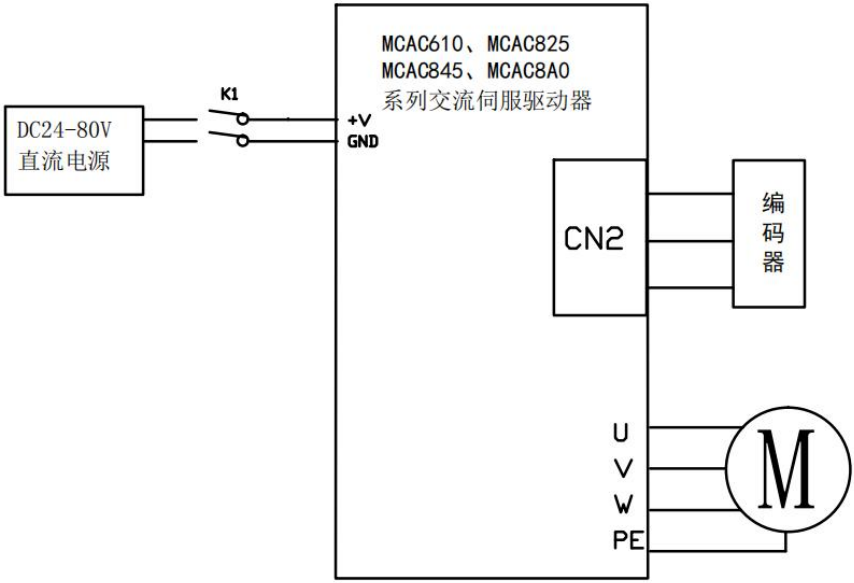

Note:

MCAC610 voltage range 24~60V

2. Select JoG mode for trial operation according to the following flow chart

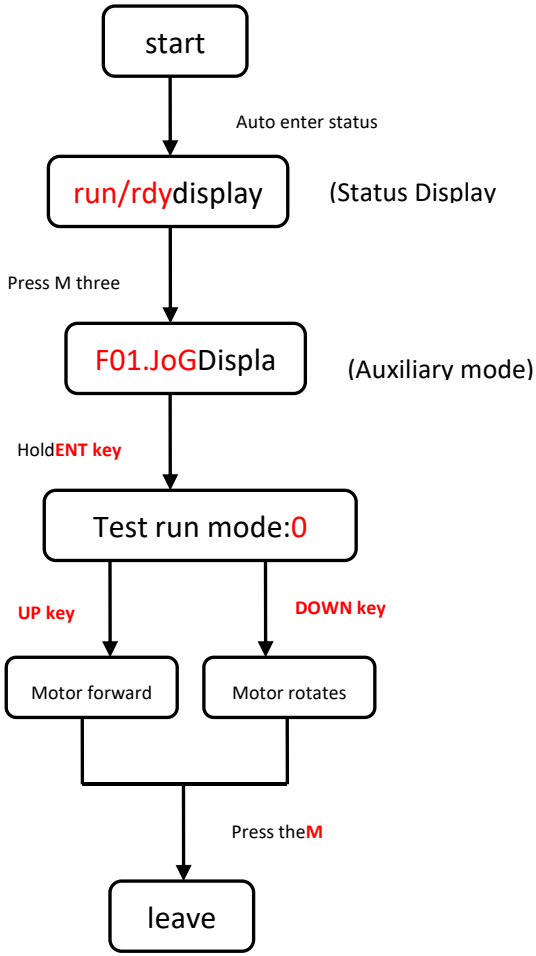

Note:F01.JOG operating speed is set by parameter P04-01

7.2 parameter adjustment

According to the equipment requirements, after selecting the appropriate control mode, it is necessary to adjust the servo gain parameters reasonably. The servo driver can drive the motor quickly and accurately, and maximize the mechanical performance.

speed given

two lines

Gain setting: Low Gain setting: Medium Gain setting: High + Feedforward

Position loop gain: 800 Position loop gain: 1600 Position loop gain: 1600

Speed loop proportional gain: 400 Speed loop proportional gain: 600 Speed loop proportional gain: 600

Velocity loop integral time constant: 1000 Velocity loop integral time constant: 1000 Velocity loop integral time constant: 1000

Speed Feedforward Gain: 0 Speed Feedforward Gain: 0 Speed Feedforward Gain: 50

Load inertia ratio: 100 Load inertia ratio: 100 Load inertia ratio: 100

The servo gain is adjusted by several loop parameters (position loop, velocity loop, filter, etc.), which influence each other. Therefore, the gain setting needs to be balanced according to certain rules.

7.3 manual gain adjustment

7.3.1 basic parameters

When the automatic gain adjustment does not achieve the desired effect, you can manually adjust the gain to optimize the effect.

The servo system consists of three control loops. The basic control block diagram is as follows:

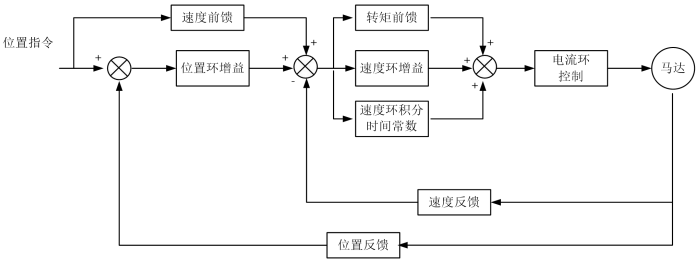

Gain adjustment needs to follow the order of inner ring and outer ring, first set the load moment of inertia ratio P01-04, then adjust the speed loop gain, and finally adjust the position loop gain.

Speed loop gain: adjust the setting value as much as possible without vibration and noise, which can improve speed following performance and speed up positioning time.

Speed integration constant: the smaller the setting value, the faster the integration speed, the stronger the integration effect, too small easy to produce vibration, noise.

parameter code	name	setting range	setting	theory bright
P01-02.0	Real-time automatic adjustment mode	0-4	0	0: Manually adjust rigidity. 1: Standard mode automatically adjusts rigidity. In this mode, parameters P02-00, P02-01, P02-10, P02-11, P02-13, P02-14, P08-20, P08-21 will be automatically set according to the rigidity level set by P01-03, manual adjustment of these parameters will not work. The following parameters are set by

				the user: P02-03 (velocity feedforward gain), P02-04 (velocity feedforward smoothing constant). 2: Positioning mode automatically adjusts rigidity. In this mode, parameters P02-00, P02-01, P02 - 10, P02-11, P02-13, P02-14, P08-20, P08-21 will be automatically set according to the rigidity level set by P01-03. Manual adjustment of these parameters will not work. The following parameters will be fixed and cannot be changed: P02-03 (velocity feedforward gain): 30% P02-04 (velocity feedforward smoothing constant): 50 3: Automatic adjustment of rigidity 2. In this mode, parameters P02-00, P02-01, P02-10, P02-11, P02-13 will automatically set the rigidity level set according to P01-03. The following parameters are set by the user: P02-03 (speed feedforward gain), P02-14 (speed integration constant 2), P08-20 (torque command filter constant 1), P08-21 (torque command filter constant 2) 4: Automatic adjustment, dependent on parameters P01-05, P01-06
P01-03	Automatic adjustment of stiffness settings in real time	0-31	13	Built-in 32 kinds of gain parameters, when P01-02 is set to 1, 2, 3 when the effect. Can be called directly according to the actual situation, the larger the setting value, the stronger the rigidity.
P02-00	Position Control	0-20000	400	Larger settings result in higher gain, greater stiffness, and smaller lag, but larger values can

	Gain 1			cause system oscillation and overshoot. Increases the value as much as possible without oscillation. Increases for static.
P02-01	Position Control Gain 2	0-20000	400	Larger settings result in higher gain, greater stiffness, and smaller lag, but larger values can cause system oscillation and overshoot. Increases the value as much as possible without oscillation. Increases for movement.
P02-03	velocity feedforw ard gain	0-100	30	The feedforward gain of velocity loop, the larger the parameter value, the smaller the position tracking error of system, the faster the response. However, if the feedforward gain is too large, the position loop of the system will be unstable, and overshoot and oscillation will easily occur.
P02-04	velocity feedforw ard smoothin g constant	0-6400	50	This parameter is used to set the velocity loop feedforward filter time constant. The larger the value, the larger the filtering effect, but the larger the phase lag.
P02-10	Speed proportio nal gain 1	1-20000	400	Larger settings result in faster speed response, and parameter values are set according to load conditions. Increases the value as much as possible without oscillation. Increases for static.
P02-11	Velocity integral constant 1	10-5120 0	200 0	Integral time constant of speed regulator, the smaller the setting value, the faster the integration speed, the greater the stiffness, too small easy to produce vibration, noise. <$) Reduce the value of this parameter as much as possible without system oscillation. $> This parameter is for steady state response.

P02-13	Speed proportional gain 2	1-20000	400	Larger settings result in faster speed response, and parameter values are set according to load conditions. Increases the value as much as possible without oscillation. Increases for movement.
P02-14	Velocity integral constant 2	10-51200	2000	Integral time constant of speed regulator, the smaller the setting value, the faster the integration speed, the greater the stiffness, too small easy to produce vibration, noise. <$) Reduce the value of this parameter as much as possible without system oscillation. $> This parameter is for steady state response.

7.3.2 gain switching

The gain switching function can be triggered by servo internal status or external DI port and is only active in position control and speed control modes. Gain switching can be used to:

Switch to lower gain in motor rest (servo enabled) state to suppress vibration;

Switch to higher gain in motor running (servo enabled) state to shorten positioning time;

Switch to higher gain in motor running state to obtain better command following performance;

Depending on the usage, an external signal is used to switch between different gain settings.

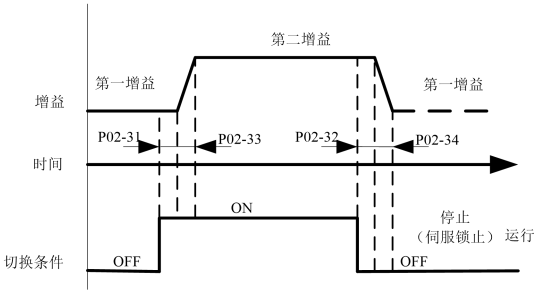

relevant parameter

parameter code	name	setting range	factory setting	unit	entry-into-force time
P02-30.0	Gain switching settings	0-1	0	---	with immediate effect
P02-30.1	gain switching mode	0-9	0	---	with immediate effect
P02-31	Gain switching time 1	0-60000	100	ms	with immediate effect
P02-32	Gain switching time 2	0-60000	800	ms	with immediate effect
P02-33	Gain switching latency 1	0-60000	1000	ms	with immediate effect
P02-34	Gain switching latency 2	0-60000	100	ms	with immediate effect

7.3.3 feed forward function

Speed feedforward: During position control, the required speed control command is calculated from the position command and added to the output of the position regulator to reduce the position deviation and improve the response of position control.

Torque feedforward: calculating the required torque command from the speed control command and adding it to the speed regulator output to improve the speed control response.

A. velocity feedforward operation

With the velocity feedforward smoothing constant set to 50 (0.5ms), the system requirements are met by increasing the velocity feedforward gain step by step. However, excessive velocity feedforward gain will cause position overshoot, which will prolong the settling time.

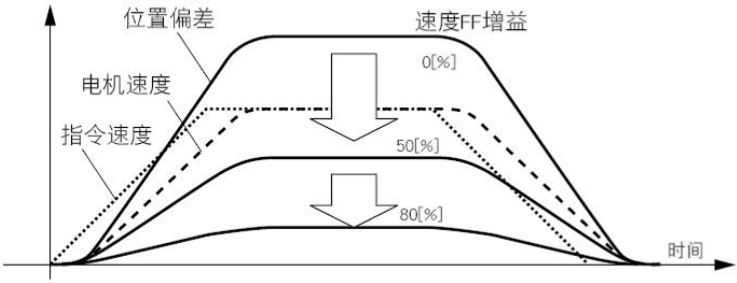

B. torque feedforward operation

When the torque feedforward smoothing constant is set to 50, the torque feedforward gain is gradually increased to meet the system requirements.

relevant parameter

parameter code	name	setting range	leave factory setting	unit	take effect time
P02-03	velocity feedforward gain	0-100	30	1%	with immediate

					effect
P02-04	velocity feedforward smoothing constant	0-6400	50	0.01ms	with immediate effect
P02-19	torque feedforward gain	0-200	0	1%	with immediate effect
P02-20	torque feedforward smoothing constant	0-6400	80	0.01ms	with immediate effect

7.3.5 resonance suppression

Too much stiffness and too fast response of servo system may cause resonance of mechanical system, which can be improved by reducing the gain of control loop. Resonance suppression can also be performed by using low-pass filters and traps without reducing gain.

1. Resonance frequency detection

The resonance frequency of the mechanical system can be observed through monitoring items d26.1.Fr, d28.2.Fr

2. Torque command low-pass filter (P08-20, P08-21)

Low-pass filters are used when the vibration frequency shifts, and they can have good effects when used for high frequency vibration. By setting the filter time constant, resonance is attenuated near the resonance frequency. However, low-pass filter will make the phase lag, bandwidth reduction, phase margin reduction easily lead to loop oscillation. Therefore, it can only be used in high-frequency vibration occasions.

Filter cutoff frequency (Hz)= 1/(2*pi*P08-20(ms)*0.001)

parameter code	name	setting range	leave factory setting	unit	take effect time
P08-20	torque command filter constant	0-2500	100	0.01ms	with immediate effect
P08-21	the second torque command filt constant	0-2500	100	0.01ms	with immediate effect

3. Notch filter

Notch filters are used when the resonant frequency of the system is fixed. A notch filter can suppress mechanical resonance by reducing the gain at a specific frequency. If the trap is set correctly, the vibration can be suppressed effectively, and the servo gain can be increased continuously. Servo built-in multiple sets of traps, the first and second traps can be automatically set by the internal, but also through manual input parameters. Other traps can only be parameterized manually.

A. adaptive trap mode

When the self-tuning function is used, and P 08-25.0, P 08-25.1 are set to 1, the servo system will automatically identify the current resonance frequency and automatically configure the trap parameters through the adaptive trap function module.

B. Perform frequency identification manually and set trap parameters

The auxiliary function of the driver can be used to identify vibration frequency and set trap parameters at the same time. Note: This function only scans the maximum amplitude point of each frequency of the machine. This function scans out frequencies even if the machine itself does not have mechanical resonance points. Use steps:

a) Confirm whether the first trap and the second trap allow setting. This can be determined by looking at parameter P 08-24. If both the first trap and the second trap are enabled. Then it is necessary to set the parameters of the first or second trap to the third trap and set the corresponding P 08-24. 0/1 is set to 0. That is, it means that the first/second trap can be reset.

b) Turn off servo enable so that servo is in the OFF enable state. Then perform auxiliary function F 21

c) After performing the F 21 auxiliary function, the driver will give the motor a certain excitation to trigger mechanical resonance. The identified vibration frequency is then displayed on the driverLED.

d) If the frequency identification is correct, press and hold the OK key, the driver will automatically set the current frequency parameter to the first/second trap, and set the corresponding P 08-24.0/1 to 1 to start the trap.

relevant parameter

parameter code	name	explain
P08-51	sweep torque amplitude	Setting range:1-300 sweep torque amplitude

C. Use auxiliary functions to identify resonance frequencies and set trap parameters during mechanical operation

The auxiliary function of the driver can be used to identify vibration frequency and set trap parameters at the same time. The difference from the function of the previous point is that in item B, when the mechanical switch is enabled, the driver itself gives excitation to identify resonance. Item C refers to resonance in normal operation of the machine and identifies the frequency. Use steps:

a) Confirm whether the first trap and the second trap allow setting. This can be determined by looking at parameter P 08-24. If both the first trap and the second trap are enabled. Then it is necessary to set the parameters of the first or second trap to the third trap and set the corresponding P 08-24. 0/1 is set to 0. That is, it means that the first/second trap can be reset.

b)Auxiliary function F22 is

c) After performing the F 22 auxiliary function, the driver enters the frequency recognition state for 10 s. When the device is operated during this time, the driver will recognize when resonance points occur and display them on the LED. Sensitivity of frequency identification depends on parametersP02 -51, P02-52.

d) If the frequency identification is correct, press and hold the OK key, the driver will automatically set the current frequency parameter to the first/second trap, and set the corresponding P 08-24.0/1 to 1 to start the trap.

relevant parameter

parameter code	name	explain
P02-51	vibration detection sensitivity	Setting range: 50-500
P02-52	Vibration detection level	Setting range: 0-5000 the small that parameter value, the more sensitive the detection sensitivity is

D. Manual setting of trap parameters

a) The resonance frequency of the mechanical system can be observed through monitoring items d26.1.Fr, d28.2.Fr.

b) inputting the resonance frequency observed in the previous step into the trap parameters, and simultaneously inputting the width grade and depth grade of the trap group.

c) If the vibration is suppressed, it means that the trap works. You can continue to increase the gain, and repeat the previous 2 steps after new vibrations appear.

d) If the vibration cannot be eliminated for a long time, please turn off the servo enable in time.

E. trap width class

$$\text{陷波宽度等级}=\frac{\text{陷波宽度}}{\text{陷波中心频率}}$$

Trap width represents a frequency bandwidth with an amplitude attenuation of-3 dB relative to the trap center frequency

F. trap depth rating

$$\text{陷波深度等级}=\frac{\text{输出值}}{\text{输入值}}$$

At a trap depth level of 0, the input is completely suppressed at the center frequency, and at a depth level of 100, the input is completely passable at the center frequency.

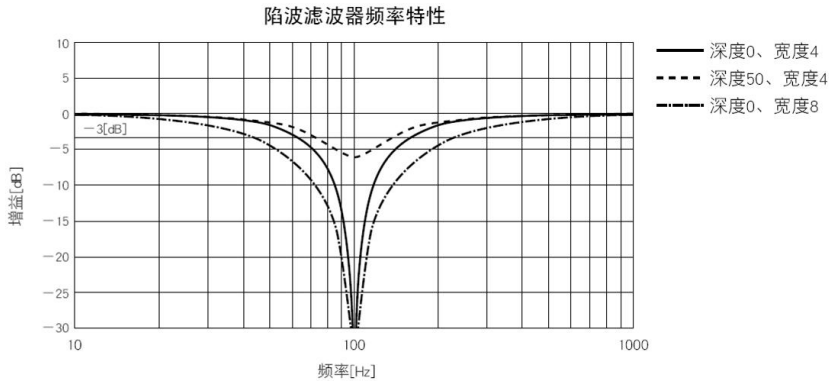

relevant parameter

para meter	name	explain

code		
P08-30	Notch filter 1 frequency	Setting range: 300-5000, unit: Hz Center frequency of trap 1 When set to 5000, trap is invalid
P08-31	Notch filter 1 breadth	Setting range:50-1000 Notch Width Rating for Trap 1 is the ratio of width to center frequency.
P08-32	Notch filter 1 depth	Setting range:0-1000 Trap Depth Rating for Trap 1 is the ratio between the input and output of the trap center frequency. The larger this parameter, the smaller the notch depth and the weaker the effect

trap correlation parameter

parameter code	name	setting range	leave factory setting	unit	take effect time
P08-24.0	first trap enable	0-1	0	---	with immediate effect
P08-24.1	second trap enable	0-1	0	---	with immediate effect
P08-30	Notch Filter 1 Frequency	50-5000	5000	HZ	with immediate effect
P08-31	Notch Filter 1 Width	50-1000	70	0.01	with immediate effect
P08-32	Notch Filter 1 Depth	0-1000	0	0.001	with immedia

					te effect
P08-33	Notch Filter 2 Frequency	50-5000	5000	HZ	with immediate effect
P08-34	Notch Filter 2 Width	50-1000	70	0.01	with immediate effect
P08-35	Notch Filter 2 Depth	0-1000	0	0.001	with immediate effect
P08-36	Notch filter 3 frequency	50-5000	5000	HZ	with immediate effect
P08-37	Notch Filter 3 Width	50-1000	70	0.01	with immediate effect
P08-38	Notch Filter 3 Depth	0-1000	0	0.001	with immediate effect

* Note: No. 1 and No. 2 traps need P 08-24 enabled to function. The third trap only needs to set the frequency parameters to work.

VIII Parameters and Functions

8.1 Parameter list

P00-xx indicates motor and driver parameters

P01-xx Main control parameters

P02-xx indicates gain class parameters

P03-xx indicates position parameters

P04-xx indicates speed parameter

P05-xx indicates torque parameter

P06-xx indicates I/O parameters

P08-xx indicates advanced functional parameters

8.2 P00-xx motor and driver parameters

parameter code	name	explain
P00-00	Motor No.	Factory set, no need to set 0: P00-00 to P00-19 active 2000: Absolute encoder motor, P00-01 to P00-19 are automatically identified by the driver
P00-01	rated speed of motor	Setting range: 1 - 6000, unit: rpm Factory set, no need to set
P00-02	motor rated torque	Setting range: 1-65535, unit: 0.01N.M According to the distribution machine settings, the factory has been set
P00-03	motor rated current	Setting range: 1-65535, unit: 0.01A According to the distribution machine settings, the

			factory has been set
P00-04		motor moment of inertia	Setting range: 1-65535, unit: 0.01kg.cm ² According to the distribution machine settings, the factory has been set
P00-05		motor pole pair	Setting range: 1-31, unit: antipole According to the distribution machine settings, the factory has been set
P00-07	0	Encoder-Type	Setting range: 0-1 0: incremental encoder; 1: absolute encoder;
	1	Encoder-Overheat Alarm	Setting range: 0-1 0: Turn on overheat alarm 1: Turn off overheat alarm
	2	Encoder-Multiturn Alarm	Setting range: 0-1 0: Turn on multi-turn alarm (multi-turn absolute encoder) 1: Turn off multi-turn alarm (single-turn absolute encoder)
	3	Encoder-Battery Alarm	Setting range: 0-1 0: Battery alarm on (multiturn absolute encoder) 1: Turn off battery alarm (single-turn absolute encoder)
P00-08		encoder zero offset	Setting range: 0-360° According to the distribution machine settings, the factory has been set
P00-09		rated voltage	According to the distribution machine settings, the factory has been set
P00-10		rated power	According to the distribution machine settings, the factory has been set
P00-11		maximum torque	According to the distribution machine settings, the factory has been set
P00-12		maximum rotational speed	According to the distribution machine settings, the factory has been set
P00-13		stator resistance	According to the distribution machine settings, the factory has been set
P00-14		stator	According to the distribution machine settings, the factory has been set

		inductance Lq	
P00-15		stator inductance Ld	According to the distribution machine settings, the factory has been set
P00-16		coefficient of linear back EMF	According to the distribution machine settings, the factory has been set
P00-17		electrical constant	According to the distribution machine settings, the factory has been set
P00-18		mechanical constant	According to the distribution machine settings, the factory has been set
P00-19		Current gain percentage	According to the distribution machine settings, the factory has been set
P00-20		Power-on interface display setting	Setting range:0-100, default 100 Set according to customer display requirements When set to 100, the drive displays run status when powered up Other parameter setting values are set according to the serial number of the monitoring item list (Chapter 8.3). For example: when the customer needs to drive and display the motor speed d08.F.SP when powering on, the parameter is set to 8.
P00-23		Slave ID Settings	Setting range: 0-255, default 1 Slave ID setting during Modbus communication
P00-24	0	Modbus communication baud rate	Setting range: 0-7, default 2 0:2400 1:4800 2:9600 3:19200 4:38400 5:57600 6:115200 7:256000
	1	485 Communication	Setting range 0-3, default 0 0: no check, 2 stop bits

P00-24		parity check mode	1: even check, 1 stop bit 2: odd parity, 1 stop bit 3: No check, 1 stop bit
P00-26		Modbus communication response delay	Setting range: 0-100, unit. 01mS。Default 0 When the parameter is set to 0, respond according to standard communication. When the parameter is set to 0, Modbus communication response time responds according to the set time.
P00-30		Braking resistor settings	Setting range: 0-2 0: No regenerative resistor used 1: Use built-in regenerative resistor 2: Use external regenerative resistor
P00-31		External braking resistance power	Setting range: 1-65535, unit: 1W According to the external braking resistance power correctly set, such as: set value is 40, then the resistance power is 40W
P00-32		External brake resistance	Setting range: 1-65535, unit: 0.1 ohm Correct setting according to external braking resistance
P00-33		Built-in braking resistance power	Setting range: 1-65535, unit: 1W According to the built-in braking resistor power correctly set, such as: set value is 40, then the resistance power is 40W
P00-34		Built-in braking resistance	Setting range: 1-65535, unit: 0.1 ohm Correct setting according to built-in braking resistance
P00-35		coefficient of heat dissipation	Setting range: 1-100, unit: % According to the reasonable setting of resistance heat dissipation conditions, the heat dissipation conditions can be set appropriately. When the setting value is large, the regenerative allowable energy of the resistance increases, and it is not easy to report regenerative overload.
P00-39	0	Three-phase power input selection	Setting range: 0-1 0: Single power input 1: Three-phase power input (phase loss alarm AL400 will be generated when phase loss)

	1	Electrical signal shielding on RST	Setting range: 0-1 0: Normal use power-on judgment signal 1: shield power-on signal
P00-40		Temperature compensation settings	Setting range: -20-20, unit: Celsius Correction of deviation of d24.Ath from actual temperature by parameter values
P00-41		Overtemperature alarm settings	Setting range: 1-150, unit: Celsius Alarm when radiator temperature reaches set value E.440
P00-42		Overtemperature warning settings	Setting range: 1-150, unit: Celsius Overtemperature warning when radiator temperature reaches set point
P00-43		Fan startup temperature setting	Setting range: 1-150, unit: Celsius Fan starts when radiator temperature reaches set point
P00-44	0	Fan fault settings	Setting range: 0-1 0: Close fault 1: Allow fault
	1	Abnormal fault setting for communication with FPGA (E.052)	Setting range: 0-1 0: Close fault 1: Allow fault
	2	Regeneration abnormal alarm (E.430)	Setting range: 0-1 0: Close fault 1: Allow fault
	3	Soft start resistor overload fault setting (E.435)	Setting range: 0-1 0: Close fault 1: Allow fault
	0	DB overload fault setting	Setting range: 0-1 0: Close fault 1: Allow fault

P00-46		(E.436)	
	1	Motor runaway detection fault setting (E.421)	Setting range: 0-1 0: Close fault 1: Allow fault
	2	u-phase current feedback abnormality (E.071)	Setting range: 0-1 0: Close fault 1: Allow fault
	3	w-phase current feedback abnormality (E.072)	Setting range: 0-1 0: Close fault 1: Allow fault
P00-47	0	Motor power line disconnection fault setting (E.305)	Setting range: 0-1 0: Close fault 1: Allow fault
	1	FPGA clock anomaly fault setting (E.069)	Setting range: 0-1 0: Close fault 1: Allow fault
P00-50		Motor stall protection time	Setting range: 0-60000Unit: ms Set the alarm protection time of AL410 when triggeringmotor to block rotation
P00-51		overload warning value	Setting range: 0-100Unit: % Set the overload warning threshold as a percentage of the overload warning time. Eg: When 60% is set, overload alarm is triggered when overload accumulation reaches overload alarm60%.
P00-52		Undervoltage alarm voltage value	Setting range: 0-500 Unit: V Setundervoltage alarm threshold

P00-53	Overvoltage alarm voltage value	Setting range: 0-500 Unit: V 0 is not open Set overvoltage alarm threshold
P00-55	overload reference value	Setting range: 50-200 Unit: % Set the initial threshold of overload alarm curve. When the threshold is lower than the threshold, the motor can run for a long time without triggering overload alarm.
P00-56	Motor overload percentage of time	Setting range: 10-100 Unit: % Set percentage of overload protection time curve

8.2.2 P01-xx Main control parameters

parameter code	name	explain
P01-00	rotational direction	Setting range: 0-1 0: Counterclockwise is positive 1: clockwise is positive
P01-01	control mode setting	Setting range: 0-5 0: Position control mode 1: Speed control mode 2: Torque control mode 3: Speed and torque control mode. To switch using one of the external input ports in CN1, set the selected DI port**input port function selection** to 5 (control mode switching). Control mode can be switched by controlling the logical state of the port. terminal logic: control mode valid: speed mode invalid: torque mode 4: Position and speed control mode. To switch using one of the external input ports in CN1, set the selected DI

<table>
<tr><td></td><td></td><td>portinput port function selection to 5 (control mode switching). Control mode can be switched by controlling the logical state of the port.
<table>
<tr><td>terminal logic</td><td>control mode</td></tr>
<tr><td>valid</td><td>position mode</td></tr>
<tr><td>invalid</td><td>speed mode</td></tr>
</table>
5: Position and torque control mode. To switch using one of the external input ports in CN1, set the selected DI portinput port function selection to 5 (control mode switching). Control mode can be switched by controlling the logical state of the port.
<table>
<tr><td>terminal logic</td><td>control mode</td></tr>
<tr><td>valid</td><td>position mode</td></tr>
<tr><td>invalid</td><td>torque mode</td></tr>
</table></td></tr>
<tr><td>P01-02</td><td>Real-time automatic adjustment mode</td><td>Setting range: 0-4
0: Manually adjust rigidity.
1: Standard mode automatically adjusts rigidity. In this mode, parameters P02-00, P02-01, P02-10, P02-11, P02-13, P02-14, P08-20 will be automatically set according to the stiffness level set by P01-03, manual adjustment of these parameters will not work. The following parameters are set by the user:
P02-03 (velocity feedforward gain), P02-04 (velocity feedforward smoothing constant).
2: Positioning mode automatically adjusts rigidity. In this mode, parameters P02-00, P02-01, P02 - 10, P02-11, P02-13, P02-14, P08-20 will be automatically set according to the rigidity level set by P01-03. Manual adjustment of these parameters will not work. The following parameters will be fixed and cannot be changed:</td></tr>
</table>

			P02-03 (velocity feedforward gain): 30.0% P02-04 (velocity feedforward smoothing constant): 0.50 3: Automatic adjustment of rigidity 2. In this mode, parameters P02-00, P02-01, P02-10, P02-11, P02-13 will automatically set the rigidity level set according to P01-03. The following parameters are set by the user: P02-03 (speed feedforward gain), P02-14 (speed integration constant 2), P08-20 (torque command filter constant 1), P08-21 (torque command filter constant 2) 4: Automatic adjustment, dependent on parameters P01-05, P01-06
P01-03		Automatic adjustment of stiffness settings in real time	Setting range:0-31 Built-in 32 kinds of gain parameters, when P01-02 is set to 1, 2, 3 when the effect. Can be called directly according to the actual situation, the larger the setting value, the stronger the rigidity.
P01-04		moment of inertia ratio	Setting range:0-20000, unit: 1% Set the load inertia ratio of the corresponding motor as follows: P01-04= Load inertia/Motor moment of inertia For this inertia ratio, F19.J-L auto-inertia identified values can be used, and the identified values can be written into parameters.
P01-05	0	mute adjustment selection	Setting range:0-1 0: Turn offmute adjustment 1: Turn onmute adjustment
	2	static current base gain	Setting range:0-8 The smaller the value, the smaller the current gain at low loads. 0: 20%, 8: 100%.
P01-	0	self-adjusting	Setting range:0-7

06		value	Works when P01-02 is set to 4, the higher the value, the stiffer.
P01-06	1	self-adjusting load value	Setting range:0-2 Active when P01- 0 - 2 is set to 4 The larger the value, the greater the model load
P01-10		vibration detection selection	Setting range:0-2 0: No vibration detection (E.520 alarm off) 1: Warning after vibration detection (close A. 911 warning) 2: Alarm after vibration detection
P01-11		vibration detection sensitivity	Setting range:50-500, unit: % Percentage based on P02-52
P01-12		Vibration detection level	Setting range: 0-5000 Unit: rpm vibration detection level base
P01-13		residual vibration detection amplitude	Setting range: 1-3000 Unit: 0.1% Based on the positioning completion threshold
P01-20	0	Stop method when servo OFF and Gr.1 fault occur	Setting range: 0-2 **It is necessary to confirm whether the driver has DB hardware circuit** 0: Stop the motor by DB, then hold DB. 1: Stop the motor by DB and then release DB. 2: Do not use DB, stop freely
	1	Stop method in case of Gr.2 fault	0: Use the settings in P01- 20.nX. 1: Set torque to decelerate shutdown according to P01-21, and then set according to P01- 20.nX after shutdown. 2: Slow down and stop according to P01-22 deceleration time, and then stop according to P01- 20.nX setting
P01-20	2	Stop method	0: Use the settings in P01- 20.nX. 1: Set torque according to P01-21 to decelerate and stop,

		for overtravel	and servo lock after shutdown. 2: Set torque according to P01-21 to decelerate and shut down, and enter free running state after shutdown. 3: decelerate and stop according to P01-22 deceleration time, and servo lock after shutdown. 4: Slow down and stop according to P01-22 deceleration time, and enter free running state after shutdown
	3	Method of stopping when forced to stop	0: Use the settings in P01- 20.nX. 1: Set torque to decelerate shutdown according to P01-21, and use settings in P01- 20.nX after shutdown. 2: Slow down and stop according to P01-22 deceleration time, and use the settings in P01- 20.nX after stopping.
P01-21		emergency stop, fault, deceleration stop torque in case of overtravel	Setting range:0-350 Unit: % Set deceleration torque in case of emergency stop, fault and overtravel
P01-22		emergency stop, fault, deceleration in case of overtravel shutdown time	Setting range:0-60000 Unit: ms emergency stop, fault, deceleration in case of overtravel shutdown time
P01-29		Brake open to command receive delay	Setting range:0-500 Unit: ms Delay time from brake opening to command reception
P01-30		Static state, brake OFF to motor no power delay	Setting range:0-500 Unit: ms When enabled: After the enable command is executed, the driver will receive the position command after the time of P01-30.

		Enable OFF: When the motor is in static state, the time from brake closing to non-energized state after executing the enable OFF command.
P01-31	Rotation state, brake OFF speed threshold	Setting range:0-6000, unit: rpm Motor speed threshold when the brake output is valid when the motor is rotating. Below this threshold, the brake output command is valid, otherwise it will wait for P01-32 time before the brake output command is valid.
P01-32	Rotation state, servo OFF to brake OFF delay	Setting range:0-1000, unit: ms The longest waiting time of the brake output when the motor is rotating at the time of closing enable.
P01-35	Z signal width setting	Setting range:0-1000, unit: 0.1ms When set to 0, default width When there is a value, the Z signal width is set in time.

8.2.3 P02-xx Gain Class Parameters

parameter code	name	explain
P02-00	Position Control Gain 1	Setting range:0-20000, unit: 0.1/S ‣ The proportional gain of the position loop adjuster, the larger the parameter value, the higher the gain proportion, the larger the stiffness, the smaller the position tracking error, and the faster the response. But too large a parameter is easy to cause vibration and overshoot. ‣ This parameter is for steady-state response.
P02-01	Position Control Gain 2	Setting range:0-20000, unit: 0.1/S ‣ The proportional gain of the position loop adjuster, the larger the parameter value, the higher the gain proportion, the larger the stiffness, the smaller the

		position tracking error, and the faster the response. But too large a parameter is easy to cause vibration and overshoot. ‣ This parameter is for dynamic response.
P02-03	velocity feedforward gain	Setting range:0-100, unit: 1% The feedforward gain of velocity loop, the larger the parameter value, the smaller the position tracking error of system, the faster the response. However, if the feedforward gain is too large, the position loop of the system will be unstable, and overshoot and oscillation will easily occur.
P02-04	velocity feedforward smoothing constant	Setting range:0-64.00, unit: 0.01ms This parameter is used to set the velocity loop feedforward filter time constant. The larger the value, the larger the filtering effect, but the larger the phase lag.
P02-10	Speed proportional gain 1	Setting range: 10-20000, unit: 0.1Hz ‣ Speed proportional gain value increases, speed response can be improved, but too large easy to produce vibration, noise. ‣ Under the condition that the system does not produce oscillation, increase this parameter value as much as possible. ‣ This parameter is for static responses.
P02-11	Velocity integral constant 1	Setting range:15-51200, unit: 0.01ms ‣ Speed regulator integration time constant, the smaller the setting value, the faster the integration speed, the greater the stiffness, too small easy to produce vibration, noise. ‣ Reduce this parameter value as much as possible without system oscillation. ‣ This parameter is for steady-state response.

P02-13	Speed proportional gain 2	Setting range: 10-20000, unit: 0.1Hz ‣ Speed proportional gain value increases, speed response can be improved, but too large easy to produce vibration, noise. ‣ Under the condition that the system does not produce oscillation, increase this parameter value as much as possible. ‣ This parameter is for dynamic response.
P02-14	Velocity integral constant 2	Setting range:15-51200, unit: 0.01ms ‣ Speed regulator integration time constant, the smaller the setting value, the faster the integration speed, the greater the stiffness, too small easy to produce vibration, noise. ‣ Reduce this parameter value as much as possible without system oscillation. ‣ This parameter is for dynamic response.
P02-19	torque feedforward gain	Setting range: 0-200, unit: 1% Set current loop feedforward weighting. This parameter weights the differential of the velocity command and adds it to the current loop.
P02-20	torque feedforward smoothing constant	Setting range:0-6400, unit: 0.01ms This parameter is used to set the torque feedforward filter time constant.
P02-21	friction compensation gain	Setting range:10-1000, unit: 0.1% Set parameters for responsiveness to external disturbances. The higher the setting value, the better the responsiveness to external disturbances. If the effect is insufficient, increase the friction compensation gain setting value by 10% within the range where vibration does not occur. However, if the device has resonance frequency, vibration may occur if the setting value is too

		high.
P02-22	2nd Friction Compensation Gain	Setting range:10-1000, unit: 0.1% Set parameters for responsiveness to external disturbances. The higher the setting value, the better the responsiveness to external disturbances. If the effect is insufficient, increase the friction compensation gain setting value by 10% within the range where vibration does not occur. However, if the device has resonance frequency, vibration may occur if the setting value is too high.
P02-23	friction compensation coefficient	Setting range:0-100, unit: 1% Set parameters for friction compensation effects. The higher the setting value, the better the effect, but the setting value is too high, the response is more likely to vibrate. Usually set the setting value tobelow 95%.
P02-24	Friction compensation Frequency compensation	Setting range:0-10000, unit: 0.1Hz This parameter is used for friction compensation frequency compensation
P02-25	friction compensation gain compensation	Setting range:1-1000, unit: % This parameter is used for friction compensation gain compensation

P02-30 P02-30	0	Gain switching settings	0: No gain switching. 1: Automatically switch gain according to conditions
	1	Gain switching settings	Setting range:0-9 Conditions for setting the first gain (P02-00, P02-10, P02-11, P08-20) and switching the second gain (P02-01, P02-13, P02-14, P08-21) 0: Positioning completion output signal ON 1: Positioning completion output signal OFF 2: Positioning approach output signal ON 3: Positioning approach output signal OFF 4: Position command filter output =0 and command pulse input OFF 5: Position command pulse input ON 6: Gain switching IO input active 7: Zero speed status active 8: Motor rotation status 9: Speed consistent state
P02-31		Gain switching time 1	Setting range:0-60000 Unit: 1ms the switch time of that second group gain switched by the first group gain is set
P02-32		Gain switching time 2	Setting range:0-60000 Unit: 1ms the switch time of that first group gain switched by the second group gain is set
P02-33		Gain switching latency 1	Setting range: 0- 1000.0, unit: ms Set the first set of gain switching latency when the switching condition is reached
P02-34		Gain switching latency 2	Setting range:0-1000.0, unit: ms the second set of gain switch waiting time is set when a switching condition is reached
P02-40	0	Mode switch function	Setting range:0-4 Set conditions for PI control and P control of speed loop

<table>
<tr><td></td><td></td><td>selection</td><td>
<table>
<tr><td>price</td><td>judgment condition</td><td>remark</td></tr>
<tr><td>0</td><td>torque command</td><td>PI control when torque command is less than P02-41 threshold, P control when torque command is greater than P02-41 threshold.</td></tr>
<tr><td>1</td><td>speed command</td><td>PI control when speed command is less than P02-42 threshold, P control when speed command is greater than P02-42 threshold.</td></tr>
<tr><td>2</td><td>accelerated speed</td><td>PI control when acceleration is less than P02-43, P control when acceleration is greater than P02-43</td></tr>
<tr><td>3</td><td>positional deviation</td><td>PI control when the position deviation is less than P02-45, P control when it is greater than P02-45.</td></tr>
<tr><td>4</td><td>modeless switch</td><td>Speed loop keeps PI control and no longer switches</td></tr>
</table>
</td></tr>
<tr><td>P02-41</td><td>Mode switching torque command threshold</td><td>Setting range:0-350, unit: 1%
When P02-40.0=0, when torque command is less than setpoint driver PI control, greater than P control</td></tr>
<tr><td>P02-42</td><td>Mode switch speed command threshold</td><td>Setting range:0-6000, unit: rps
When P02-40.0=1, when the speed command is less than the set value, the PI control of the driver is greater than the P control.</td></tr>
</table>

P02-43	Mode switch acceleration threshold	Setting range:0-30000, unit: 1rps/s When P02-40.0=2, the acceleration is less than the setpoint PI control of the driver, and greater than P control.
P02-44	Mode switch position deviation threshold	Setting range:0-10000, unit: 1 command unit When P02-40.0=3, when the position deviation is less than the set value, the PI control of the driver is greater than the P control.
P02-50	torque command addition	Setting range:-100-100, unit: 1% Valid in position control mode. This value is added to the torque setpoint for vertical axis static moment compensation.
P02-51	positive torque compensation value	Setting range:-100-100, unit: 1% Valid in position control mode. Used to compensate for forward static friction
P02-52	Negative directional torque compensation value	Setting range:-100-100, unit: 1% Valid in position control mode. Used to compensate for reverse static friction
P02-53	viscous friction compensation value	Setting range:0-100, unit: 1%
P02-57	Low frequency vibration suppression settings	Setting range:0-1 0: P02-58, P02-59 Invalid 1: Effective In position mode, it is used to suppress machine shaking caused by positioning.
P02-58	Low frequency vibration Frequency 1	Setting range: 10-2000 Unit: 0.1Hz

P02-59		Low frequency resonance setting 1	Setting range: 1 0-1000 Unit: %
P02-60	0	model tracking control selection	Setting range:0-1 0: Do not use model tracking 1: Use model tracking
	1	vibration suppression selection	Setting range:0-1 0: No vibration suppression 1: Perform vibration suppression (P02-65,P02-65 works)
P02-61		model tracking control gain	Setting range: 1 0-20000 Unit: 0.1/s When P02-60.0=1, increasing the model tracking control gain increases the responsiveness and shortens the positioning time. The responsiveness of the servo system depends on this parameter
P02-62		model tracking control gain compensation	Setting range: 500 - 2000 Unit: 0.1% Increasing the gain compensation of model tracking control results in higher responsiveness and shorter positioning time.
P02-63		Model Tracking Control Bias (Forward Direction)	Setting range: 1 0-1000 Unit: 0.1% When the forward and reverse responses are different, fine tune them with the following parameters. If the setting value is decreased, although the responsiveness becomes slow, overshoot is less likely to occur.
P02-64		Model tracking control bias (reverse direction)	Setting range: 1 0-10000 Unit: 0.1% When the forward and reverse responses are different, fine tune them with the following parameters. If the setting value is decreased, although the responsiveness becomes slow, overshoot is less likely to occur.
P02-65		Vibration	Setting range: 1 0-2500 Unit: 0.1Hz

	Suppression 1 Frequency A	Vibration suppression 1 frequency A. P02-60-1 Active when enabled
P02-66	Vibration Suppression 1 Frequency B	Setting range: 1 0-2500 Unit: 0.1Hz Vibration suppression 1 frequency B. P02-60-1 Active when enabled
P02-67	Model Tracking Control Speed Feedforward Compensation	Setting range: 1 0-10000 Unit: 0.1% When overshoot occurs even if you adjust the Model Tracking Control Gain, Model Tracking Control Bias (Forward Direction), and Model Tracking Control Bias (Reverse Direction), you can improve it by adjusting this parameter. If the setting value is decreased, although the responsiveness becomes slow, overshoot is less likely to occur.
P02-68	Model 2 tracking control gain	Setting range: 1 0-20000 Unit: 0.1/s When P02-60.0=1, increasing the tracking control gain of the second model increases the responsiveness and shortens the positioning time. The responsiveness of the servo system depends on this parameter
P02-69	Model 2 tracking control gain compensation	Setting range: 500 - 2000 Unit: 0.1% Increasing the gain compensation of model tracking control results in higher responsiveness and shorter positioning time.
P02-70 0	Speed Suppression Settings	Setting range:0-1 0: Nospeed damping 1:Speed suppression
P02-71	velocity suppression frequency	Setting range: 10 - 20000 Unit: 0.1Hz Set speed suppression frequency
P02-72	Speed suppression	Setting range: 10 - 20000 Unit: 0.1Hz Set speed suppression frequency 2

	frequency 2	
P02-73	velocity suppression gain compensation	Setting range: 0 - 1000 Unit: 1%
P02-74	velocity damping gain	Setting range: 0 - 300 Unit: 1% The larger the value, the stronger the vibration suppression effect.
P02-75	Speed Suppression Attenuation Gain 2	Setting range: 0 - 300 Unit: 1% The larger the value, the stronger the vibration suppression effect.
P02-76	Speed Suppression Filter Time Parameter 1 Compensation	Setting range: 0 - 1000 Unit: 0.01ms
P02-77	Speed Suppression Filter Time Parameter 2 Compensation	Setting range: 0 - 1000 Unit: 0.01ms
P02-88	Current control gain value	Setting range:0-100, unit: 1% This parameter is the current gain adjustment factor

8.2.4 P03-xx position parameters

parameter code	name	explain

P03-00		Location Command Source	0: Pulse command 1: Reserved 2: Bus instruction 3: Built-in multi-stage position
P03-01	0	command pulse pattern	0: Quadrature pulse command (90° phase difference two-phase pulse) 1: direction + pulse command 2 or 3: Double Pulse Command (CW+CCW)
P03-02	0	Overtravel signal clears residual position deviation	0: Overtravel signal does not clear residual position deviation 1: Overtravel signal clears residual position deviation
P03-03	0	instruction pulse negation	Used to adjust pulse instruction count direction 0: Normal. 1: Reverse direction
	1	command pulse active level negated	0: rising edge count 1: falling edge count
P03-04		instruction pulse filtering	Setting range:0-2000 Unit: 0.1us Command pulse filter width setting, filter width = set value *0.1(us)
P03-05		Position completion output condition	0: Position deviation less than P03-06 set value 1: Position deviation is less than P03-06 set value, and the filtered command of position command is 0 2: Position deviation is less than P03-06 set value, and the command after position command is 0.
P03-06		Location completion range	Setting Range:0-65535 Unit: Command Unit It is used to set the threshold value of the positioning completion output signal, and the set value is the command unit (refer to parameters P03-09, P03-40 and P03-42). The positioning completion range is used as the

		position gain adjustment judgment basis in the one-key self-adjustment function.
P03-07	Location approach threshold	Setting Range:0-65535 Unit: Command Unit It is used to set the threshold value of positioning approach output signal, and the set value is the command unit (refer to parameters P03-09, P03-40 and P03-42).
P03-09	Number of command pulses per revolution of motor	Setting range: 0-1073741823 Used to set the number of command pulses for one revolution of motor. When this parameter is set to 0, parameters P03-40 and P03-42 are valid.
P03-15	Position deviation too large setting	Setting range: 0-1073741823 Unit: Command Unit Set the pulse number of allowable deviation, alarm E.501 when exceeding the set value; no detection when set to 0
P03-17	position command moving average time	Setting range: 0-10000 Unit: 0.1ms Set the time constant of the position command smoothing filter, moving average filter.
P03-18	Position command first-order low-pass filtering time parameter	Setting range: 0-65535 Unit: 0.1ms Set the time constant of position command smoothing filter, first order low pass filter.
P03-23	Divided output pulse denominator	Setting range:0-1073741823 When P03-23 equals 0, the number of divided pulses =P03-25*4 ; when P03-23 does not equal 0, the number of divided pulses =2^23*P03-25/P03-23.
P03-25	Number of divided output pulses	Setting range: 0-65535 Set the absolute value motor rotation, A, B frequency pulse output number respectively. Example: Set value 2500, then each rotation of the motor, A and B signals output 2500 pulses each

P03-26	0	Frequency division output pulse phase sequence inversion	Used to adjust the phase sequence of divided output pulses 0: Normal. 1: Reverse direction
P03-30		Excessive position deviation warning value	Setting range:0-100 Unit: % Excessive position deviation warning value =P03-30 setpoint *P03-15, warning A.900 when setpoint is exceeded
P03-31		Servo ON position deviation excessive alarm value	Unit: Command UnitSetting Range: 0-1073741823 Set the pulse number of allowable deviation when servo is ON. If it exceeds the set value, it will alarm E.503. If it is set to 0, it will not be detected.
P03-33		Servo ON position deviation excessive warning value	Setting range:0-100 Unit: % Servo ON position deviation excessive warning value = set value *P03-31,warning A.901 appears when the set value is exceeded
P03-34		overshoot detection value	Setting range:0-100 Unit: % Overshoot detection threshold = P03-34* P03-06. The overshoot detection value is used as the position gain adjustment judgment basis in the one-button self-adjustment function.
P03-40		Electronic Gear 1 Molecule	See**6.1.4 Electronic Gear Ratio Calculation Example for**explanation Note: Encoder numerator 8388608
P03-42		Denominator of electronic gear 1	
P03-44		Electronic Gear 2 Molecules	See**6.1.4 Electronic Gear Ratio Calculation Example for**explanation Note: Encoder numerator 8388608
P03-46		Denominator of electronic gear 2	

8.2.5 P04-xx Speed Parameters

parameter code	name	explain
P04-00	Speed command selection settings	0: analog command 1: Setpoint for P04-02 2: Bus instruction 3: Built-in multi-stage speed
P04-01	JOG Speed Command Setpoint	Setting range:0-6000 , unit: rpm Set JOG running speed
P04-02	Speed command digital setpoint	Setting range:-6000-6000, unit: rpm When P04-00 is set to 1, P04-02 is the speed setpoint
P04-04	Zero-speed clamp speed threshold	Setting range: 0-6000, unit: rpm Set the speed command threshold value that triggers the zero speed position clamp function
P04-05	overspeed threshold	Setting range: 0-6300, unit: rpm Set the maximum allowable speed value, exceeding the set value will cause**E.420** overspeed alarm.
P04-06	forward speed limit	Setting range: 0-6300, unit: rpm Limit motor forward speed value
P04-07	reverse speed limit	Setting range: -6300-0, unit: rpm Limit motor reverse speed value
P04-10	zero speed detection value	Setting range: 0-2000,unit: rpm Set zero speed detection threshold value, motor speed lower than the threshold can be output through the output port "**zero speed detection**" signal
P04-11	Motor rotation detected speed	Setting range: 0-2000, singledigit: rpm Set motor rotation detection threshold, motor speed

<table>
<tr><td></td><td>value</td><td>higher than this value can be displayed through the LED panel status</td></tr>
<tr><td>P04-12</td><td>Speed reaches signal threshold</td><td>Setting range: 0-2000,unit: rpm
setting the threshold value of the speed consistent signal, and outputting thespeed arrival detection signal through the output port when the difference between the motor speed and the command speed is within the threshold value range</td></tr>
<tr><td>P04-14</td><td>speed command acceleration time</td><td>Setting range: 0-10000, singlebit: 1ms/1000rpm
Set acceleration for speed control</td></tr>
<tr><td>P04-15</td><td>Speed command deceleration time</td><td>Setting range: 0-10000, singlebit: 1ms/1000rpm
Set deceleration for speed control</td></tr>
<tr><td>P04-30

P04-37</td><td>Internal speed settings 1-8</td><td>Setting range: -6000-6000, singledigit: rpm
Parameters P04-30 to P04-37 set internal speed 1 to internal speed 8, respectively
The internal speed switching method is as follows:
P04-00 is set to 3 when the speed loop is controlled,
The corresponding input port functions are defined as 0D, 0E, 0F
Example: Use input signal ports DI3, DI4 and DI5, and define I/O port functions as 0D, 0E and 0F respectively (see P06- 11 parameter description for function definition), and realize speed switching operation corresponding to parameter setting through I/O level combination.
<table>
<tr><td>DI3</td><td>DI4</td><td>DI5</td><td>interaction parameters</td></tr>
<tr><td>0</td><td>0</td><td>0</td><td>P04-30</td></tr>
</table></td></tr>
</table>

		1	0	0	P04-31	
		0	1	0	P04-32	
		1	1	0	P04-33	
		0	0	1	P04-34	
		1	0	1	P04-35	
		0	1	1	P04-36	
		1	1	1	P04-37	

8.2.6 P05-xx Torque parameters

parameter code	name	explain
P05-00	Torque command selection setting	0: analog command 1: Setpoint for P05-03 2: Bus instruction 3: Built-in multi-stage torque
P05-01	Torque Control Speed Limit Source Setting	0: Speed analog command 1: Setpoint for P05-02 2: Bus instruction 3: Built-in multi-stage speed
P05-02	torque control speed limit	Setting range: 0-6000Unit: rpm Set the maximum speed of the motor in torque mode to prevent mechanical damage caused by excessive motor speed in no-load Torque control mode active
P05-03	Torque command digital setpoint	Setting range:-300-300, unit: % When P05-00 is set to 1, P05-03 is the digital torque setpoint
P05-05	Torque Limiting Source Settings	0: Internal/external torque setting P05-10,5-11 or P05-12,05-13 1: Torque analog command limiting, superimposed

<table>
<tr><td></td><td></td><td>with P05- 10, 05 -11 or P05- 12, 05 -13
2: Torque analog command limiting, only effective when PCL and NCL are active. P05- 10, 05 -11 or P05- 12, 05 -13 superimposed simultaneously</td></tr>
<tr><td>P05-06</td><td>Torque limit detection signal output delay</td><td>Setting range: 0-10000, unit: ms
Set DO port outputtorque limit medium signal delay time</td></tr>
<tr><td>P05-10</td><td>Forward internal torque limit</td><td>Setting range: 0-350 Unit: 1% rated torque
Limit motor forward output, 100 means 1 times torque, 300 means 3 times torque
When torque output reaches limit value,torque limit medium signal can be output through DO port</td></tr>
<tr><td>P05-11</td><td>Reverse internal torque limit</td><td>Setting range: -350-0 Unit: 1% rated torque
Limit motor reverse output, set 100 to 1 times torque, 300 to 3 times torque
When torque output reaches limit value,torque limit medium signal can be output through DO port</td></tr>
<tr><td>P05-12</td><td>Forward external torque limit</td><td>Setting range: 0-350 Unit: 1% rated torque
This function needs to be switched by using an external input port in CN1, and the selected DI portinput port function selection is set to 7 (positive external torque limit value). Control mode can be switched by controlling the logical state of the port.
<table>
<tr><td>terminal logic</td><td>torque limit</td></tr>
<tr><td>valid</td><td>External limiting P05-12</td></tr>
<tr><td>invalid</td><td>Internal limit P05-10</td></tr>
</table>
If the DI function is not assigned, the system defaults to P05-10 for torque limiting</td></tr>
</table>

<table>
<tr><td></td><td></td><td>When torque output reaches limit value,torque limit medium signal can be output through DO port</td></tr>
<tr><td>P05-13</td><td>Reverse external torque limit</td><td>Setting range: 0-350 Unit: 1% rated torque
This function needs to be switched by using one of the external input ports in CN1. Set the selected DI portinput port function selection to 8 (reverse external torque limit value). Control mode can be switched by controlling the logical state of the port.
<table>
<tr><td>terminal logic</td><td>torque limit</td></tr>
<tr><td>valid</td><td>External limiting P05-13</td></tr>
<tr><td>invalid</td><td>Internal limit P05-11</td></tr>
</table>
If this DI function is not assigned, the system defaults to P05-11 for torque limiting
When torque output reaches limit value,torque limit medium signal can be output through DO port</td></tr>
<tr><td>P05-14
~
P05-17</td><td>Internal setting torque 1 to 4</td><td>Setting range: -300-300, singledigit: % rated torque
Parameters P05-14 to P05-17 set internal torque 1 to internal torque 4, respectively
The internal speed switching method is as follows:
P05-00 is set to 3 when torque loop control
The corresponding input port functions are defined as11, 12
Example: Use input signal ports DI3 and DI4. I/O port functions are defined as 11 and 12 respectively (see P06- 11 parameter description for function definition), and torque switching operation corresponding to parameter setting is realized through I/O level combination.
<table>
<tr><td>DI3</td><td>DI4</td><td>interaction</td></tr>
</table></td></tr>
</table>

				parameters
		0	0	P05-14
		1	0	P05-15
		0	1	P04-16
		1	1	P04-17

8.2.7 P06-xx I/O Parameters

parameter code	**name**	**explain**
P06-00	Power-on active DI function assignment 1	Setting range: 00-ffff Factory setting: 0 Table 1 Corresponding relationship between setting value and corresponding power-on forced valid input function

set point	Power-on effective function
n.xxx1	0x01: Servo enabled
n.xxx2	0x02: Alarm cleared
n.xxx4	0x03: Forward Overtravel
n.xxx8	0x04: Reverse Overtravel
n.xx1x	0x05: Control mode switching
n.xx2x	Undefined
n.xx4x	0x07: Forward external torque limit switching
n.xx8x	0x08: Reverse external torque limit switching
n.x1xx	0x09: Gain switching
n.x2xx	0x0A: Zero lock

<table>
<tr><td></td><td></td><td>
<table>
<tr><td>n.x4xx</td><td>0x0 B: Pulse command input disabled</td></tr>
<tr><td>n.x8xx</td><td>Undefined</td></tr>
<tr><td>n.1xxx</td><td>0x0 D: Speed multi-stage selection 1</td></tr>
<tr><td>n.2xxx</td><td>0x0 E: Speed multi-stage selection 2</td></tr>
<tr><td>n.4xxx</td><td>0x0 F: Speed multi-stage selection 3</td></tr>
<tr><td>n.8xxx</td><td>0X10: Position Remains Command Clear</td></tr>
</table>
</td></tr>
<tr><td>P06-01</td><td>Power-on active DI function assignment 2</td><td>
Setting range: 00-ffff Factory setting: 0
Table 2 Corresponding relationship between setting value and corresponding power-on forced valid input function
<table>
<tr><td>set point</td><td>Power-on effective function</td></tr>
<tr><td>n.xxx1</td><td>0X11: Torque multi-stage selection 1</td></tr>
<tr><td>n.xxx2</td><td>0X12: Torque multi-stage selection 2</td></tr>
<tr><td>n.xxx4</td><td>0x13: Gantry synchronization enabled</td></tr>
<tr><td>n.xxx8</td><td>0x14: gantry alignment reset signal</td></tr>
<tr><td>n.xx1x</td><td>0x15: home switch signal</td></tr>
<tr><td>n.xx2x</td><td>0x16: Origin Return Start Signal</td></tr>
<tr><td>n.xx4x</td><td>0X17: Speed simulation command negated</td></tr>
<tr><td>n.xx8x</td><td>0X18: Torque simulation</td></tr>
</table>
</td></tr>
</table>

			command negated
			n.x1xx: 0X19: External alarm signal
			n.x2xx: 0X1A: Emergency stop input signal
			n.x4xx: 0X1B: Probe 1 input signal
			n.x8xx: 0X1C: Probe 2 input signal
			n.1xxx: 0X1D: magnetic pole detection request signal
			n.2xxx: 0X1E: Position command negated signal
P06-05	0	speed analog command selection	0: Use Ain_1 (Speed Analog Command Interface) 1: Use Ain_2 (torque analog command interface)
	1	torque analog command selection	0: Use Ain_2 (torque analog command interface) 1: Use Ain_1 (Speed Analog Command Interface)
P06-11	01	DI1 Terminal Settings-Function Selection	Setting range: 00-1E Factory setting: 1 Servo ON 0x00: None 0x01: Servo enabled 0x02: Alarm cleared 0x03: Forward Overtravel 0x04: Reverse Overtravel 0x05: Control mode switching 0x06: P control command input 0x07: Forward external torque limit switching 0x08: Reverse external torque limit switching 0x09: Gain switching 0x0A: Zero lock 0x0 B: Pulse command input disabled 0x0 D: Speed multi-stage selection 1

P06-11			0x0 E: Speed multi-stage selection 2 0x0 F: Speed multi-stage selection 3 0X10: Position Remains Command Clear 0X11: Torque multi-stage selection 1 0X12: Torque multi-stage selection 2 0x13: Gantry synchronization enabled 0x14: gantry alignment reset signal 0x15: home switch signal 0x16: Origin Return Start Signal 0X17: Speed simulation command negated 0X18: Torque simulation command negated 0X19: External alarm signal 0X1A: Emergency stop input signal 0X1B: Probe 1 input signal 0X1C: Probe 2 input signal 0X1D: magnetic pole detection request signal 0X1E: Position command negated signal Note: Low-speed terminal, valid level more than 3.2ms to confirm
	2	DI1 Terminal Settings-Logic Select	0: active low (optocoupler off) 1: High active (optocoupler on) 2: Falling edge effective 3: Rising edge effective 4: Rising and falling edge effective
P06-12	0 1	DI2 Terminal Settings-Function Selection	See P06-11.01
P06-12	2	DI2 Terminal Settings-Logic	See P06-11.2

		Select	
P06-13	0 1	DI3 Terminal Settings-Function Selection	See P06-11.01
	2	DI3 Terminal Settings-Logic Select	See P06-11.2
P06-14	0 1	DI4 Terminal Settings-Function Selection	See P06-11.01
	2	DI4 Terminal Settings-Logic Select	See P06-11.2
P06-15	0 1	DI5 Terminal Settings-Function Selection	See P06-11.01
	2	DI5 Terminal Settings-Logic Select	See P06-11.2
P06-21	0 1	DO1Terminal Settings-Function Selection	Setting range: 0-13, factory setting: 3 servo ready output 0x00: None 0x01: Servo alarm 0x02: Brake output 0x03: Servo ready 0x04: Position arrived 0x05: Position close 0x06: Speed arrival detected 0x07: Zero speed detection 0x08: Moment Limit Medium 0x09: Speed limit in progress 0x0A: Servo warning 0x0B: Reserved 0x0 C: electrical zeroing complete

			0x0 D: Return to zero completed 0x0 E: Forward Overtravel 0x0 F: Reverse Overtravel 0x10: Enable status 0x11: Dynamic braking 0x12: Motor rotation detected 0x13: Gain 1 active
	2	DO1 Terminal Settings-Logic Select	0: DO OFF when status is valid 1: DO conduction when status is valid
P06-22	0 1	DO2 output port active level	See P06-21.01
	2	DO2 Terminal Settings-Logic Select	See P06-21.2
P06-23	0 1	DO3 output port active level	See P06-21.01
	2	DO3 Terminal Settings-Logic Select	See P06-21.2
P06-24	0 1	DO4 output port active level	See P06-21.01
	2	DO4 Terminal Settings-Logic Select	See P06-21.2
P06-40		Speed analog quantity 1V corresponding speed value	Setting range: 10-2000, singleposition 1rpm/V Set the coefficient between the analog command and the speed control command input by CN1 Example: 500 represents 500 revolutions per minute per V
P06-41		AI1 filter time constant	Setting range:0-2500, unit: 0.01ms Set AI1 input analog command filter time coefficient

P06-42	AI1 offset	Setting range: -9999-9999,unit V Set analog command zero offset for AI1 input
P06-43	Torque analog quantity 1V corresponds to torque value	Setting range: 0-100,unit 1% Set the coefficient between the analog command and the speed control command input by AI1 Example: 30 represents 30% of rated torque per V
P06-46	AI1 Analog Dead Zone	Setting range: 0-9999Unit:mv Set the dead-band voltage value of speed analog command. When analog quantity is given in the positive and negative range, the system defaults to zero.

8.2.8 P08-xx advanced functional parameters

parameter code		**name**	**explain**
P08-00	0	Offline inertia identification mode	Setting range:0-1 0: Default mode (set according to P08-03, P08-04 parameters) 1: Internal setting mode (P08-03, P08-04 automatic setting)
	1	On-line inertia identification mode	Setting range:0-1
P08-01		inertia identification inertia initial value	Setting range:0-20000, unit: 1% Set inertiainitial value for inertia identification
P08-02		Inertia Identification Motor Rotation Number	Setting range:5-1000, unit: 0.1 turn Setinertia to identify motor rotation number

P08-03	inertia identification maximum velocity	Setting range: 10-2000, unit: rpm Set inertia to identify maximum running speed
P08-04	inertia identification acceleration time	Setting range: 20-800, unit: ms Set the acceleration and deceleration time of the motor when inertia identification
P08-05	Waiting time after single inertia identification	Setting range: 50-10000, unit: ms Waiting time after single inertia identification
P08-06	JOG mode	Setting range: 0-5 0:(waiting time P08-11-> forward movement P08-07)* movement times P08-12 1:(Wait time P08-11-> Reverse movement P08-07)* Number of movements P08-12 2:(Wait time P08-11-> Forward movement P08-07)* Number of movements P08-12->(Wait time P08-11-> Reverse movement P08-07)* Number of movements P08-12 3:(Wait time P08-11-> Reverse movement P08-07)* Number of movements P08-12->(Wait time P08-11-> Forward movement P08-07)* Number of movements P08-12 4:(Wait time P08-11-> Forward movement P08-07-> Wait time P08-11-> Reverse movement P08-07)* Number of movements P08-12 5:(Wait time P08-11-> Reverse movement P08-07-> Wait time P08-11-> Forward movement P08-07)* Number of movements P08-12

P08-07		Program JOG Move Distance	Setting range: 1-2000, unit: 0.1 turn Number of laps per step when setting JOG program
P08-09		Program JOG Moving Speed	Setting range: 1-10000, unit: rpm Set program JOG to move maximum rpm while running
P08-10		Program JOG Acceleration/Deceleration Time	Setting range: 2-10000, unit: ms Set program JOG acceleration and deceleration time during operation
P08-11		Procedure JOG Wait Time	Setting range: 0-10000, unit: ms Set program JOG run wait time
P08-12		Number of JOG moves	Setting range: 0-10000, unit: times Set the number of JOG moves
P08-15	0	Auto adjust settings 0	Setting range:0-1 0: self-tuning, inertia identification 1: Self-tuning, no inertia identification
P08-15	1	Auto adjust settings 1	Setting range:0-7 0, 1: Standard mode, model tracking off 2: Positioning mode: Turn on end vibration suppression, turn on model tracking, model tracking speed compensation 100% 3: Positioning mode, pay attention to overshoot: turn on end vibration suppression, turn on model tracking, model tracking speed compensation 90%
P08-16		Automatic adjustment of maximum gain	Setting range: 100-7000, unit: 0.1Hz When tuning, search for the maximum gain.
P08-17		velocity observer gain	Setting range: 10-500, unit: Hz The higher the setting, the larger the bandwidth of the velocity observer. At 500, the observer is invalid.
P08-18		velocity	Setting range: 0-500, unit: %

		observer coefficient	The larger the setting, the more effective the speed observer torque effect.
P08-20		Torque Command Filter Constant 1	Setting range:0-2500, unit: 0.01ms Torque command filter time constant 1, when the motor operation appears howling, the value can be appropriately set large.
P08-21		Torque Command Filter Constant 2	Setting range:0-2500, unit: 0.01ms Torque command filter time constant 2, when the motor operation appears howling, the value can be appropriately set large.
P08-22		Paragraph 2 Torque Command Filter Frequency	Setting range:100-5000, unit: Hz Second-order torque command filter frequency
P08-23		Paragraph 2 Torque Command Filter Q Value	Setting range:50-100, unit: 0.01 Q value of second-order torque command filter
P08-24	0	first trap selection	Setting range:0-1 0: The first trap is invalid, 1: First trap active
	1	Second trap selection	Setting range:0-1 0: Second trap invalid 1: Second trap active
	3	Friction compensation function selection	Setting range:0-1 0: Invalid 1: Effective
P08-25	0	Adaptive Trap 1 Mode Settings	Setting range:0-1 0: Invalid

			1: Allow the drive to automatically set the first trap
	1	Adaptive Trap 2 Mode Settings	Setting range:0-1 0: Invalid 1: Allow the drive to automatically set the second trap
P08-30		Notch Filter 1 Frequency	Setting range: 300-5000, unit: Hz Center frequency of trap 1. **P08-24.0 needs to be set to enable to be effective** When set to 5000, trap is invalid
P08-31		Notch Filter 1 Width	Setting range: 50-1000 Unit: 0.01 Notch Width Rating for Trap 1 is the ratio of width to center frequency.
P08-32		Notch Filter 1 Depth	Setting range:0-99 Trap Depth Rating for Trap 1 is the ratio between the input and output of the trap center frequency. The larger this parameter, the smaller the notch depth and the weaker the effect
P08-33		Notch Filter 2 Frequency	P08-30. **P08-24.1 needs to be set to enable to be effective**
P08-34		Notch Filter 2 Width	Same as P08-31
P08-35		Notch Filter 2 Depth	Same as P08-32
P08-36		Notch filter 3 frequency	Same as P08-30
P08-37		Notch Filter 3 Width	Same as P08-31
P08-38		Notch Filter 3 Depth	Same as P08-32
P08-51		sweep torque	Setting range: 1- 300

	amplitude	This setting is used as the maximum value of sweep torque when auxiliary function F 22 is performed.

8.3 List of monitoring items

display order	display items	explain	unit
d00.C.PU	position command pulse sum	This parameter can monitor the number of pulses sent by the user to the servo driver, thereby confirming whether there is a missing pulse phenomenon.	instruction unit
d01.F.PU	position feedback pulse summation	This parameter monitors the number of pulses fed back by the servo motor. The unit corresponds to the unit of the user input command	instruction unit
d02.E.PU	position deviation pulse number	This parameter monitors the number of pulses with position lag during servo system operation. The unit corresponds to the unit of the user input command	instruction unit
d03.C.PE	Position given pulse sum/ gantry motor feedback pulse	This parameter monitors the number of pulses the user sends to the servo driver. Unit: When using absolute value motor, calculate by8388608per turn.	encoder unit
d04.F.PE	Position feedback pulse sum/	This parameter monitors the number of pulses fed back by the servo motor. Unit: When using absolute value motor, calculate by8388608per turn.	encoder unit
d05.E.PE	Number of position deviation pulses/ gantry pulse deviation	This parameter monitors the number of pulses with position lag during servo system operation. Unit: When using absolute value motor, calculate according to8388608per turn.	encoder unit
d06.C.Fr	pulse command input frequency	This parameter monitors the external pulse command input frequency	0.1KHz

d07.C.SP	speed command	This parameter can monitor the servo motor when running the given speed servo	rpm
d08.F.SP	actual velocity	This parameter monitors the actual rotational speed of the servomotor during operation.	rpm
d09.C.tQ	torque command	This parameter can monitor the servo torque when the servo motor is running	%
d10.F.tQ	actual torque	This parameter can monitor the torque feedback when the servo motor is running	%
d11.AG.L	average torque	This parameter monitors the average torque of the servo motor over the last 10 seconds	%
d12.PE.L	peak torque	This parameter monitors the peak torque of the servo motor after power-up	%
d13.oL	cumulative load factor	This parameter can monitor the load rate of the drive. When it exceeds 1 00, the drive alarms overload.	%
d14.rG	regenerative load factor	This parameter can monitor the duty rate of regenerative resistance. When it exceeds 1 00, the driver alarms regenerative overload.	%
d15.PE.S	peak actual speed	This parameter monitors the peak speed of the servo motor after power-on	rpm
d16.I.Io	Input IO Status	This parameter monitors the input port status of CN1. The upper vertical bar represents high level (optocoupler OFF), and the lower vertical bar represents low level optocoupler ON). The corresponding relationship with the input port is that the vertical bars of the operation panel from right to left correspond to DI1-DI5 respectively.	binary system
d17.o.Io	Output IO status	This parameter monitors the output port status of CN1. The upper vertical bar	binary system

		represents optocoupler conduction, the lower vertical bar represents optocoupler disconnection, and the corresponding relationship with the output port is the operation panel from right to left. The vertical bars correspond to DO1-DO4 respectively.	
d18.AnG	Motor mechanical angle	This parameter can monitor the mechanical angle of the motor, 1 rotation is 360 degrees	0.1 limit
d19.HAL	electrical angle	Phase sequence position of incremental encoder motor Electrical angle of absolute encoder	0.1 limit
d20.ASS	absolute encoder single-turn value	This parameter can monitor the feedback value of absolute encoder, and the value of one rotation varies from 0 to8388607.	decimalism
d21.ASH	absolute encoder multiturn value	This parameter monitors the number of revolutions of a multi-turn absolute encoder motor	decimalism
d22.J-L	ratio of inertias	This parameter monitors the real-time inertia of the load carried by the motor	%
d23.dcp	Main circuit voltage (DC value)	This parameter monitors the DC voltage value of the main circuit	V
d24.Ath	drive temperature	This parameter monitors drive temperature	degree centigrade
d25.tiE	accumulated operation time	This parameter monitors drive uptime in seconds	second
d26.1.Fr	resonance frequency 1	This parameter monitors resonance frequency 1, high frequency resonance frequency	Hz
d28.2.Fr	Resonance frequency 2	This parameter monitors resonance frequency 2, low frequency resonance frequency	Hz
d29.cn	current control mode	This parameter can monitor the current control mode. Refer to parameter	

		P01-01 parameter table for specific corresponding relationship.	
d30.Ai1	Ai1 port input voltage	This parameter monitors the Ai1 input voltage value	0. 001V
d31.Ai2	Ai2 port input voltage	This parameter monitors the Ai2 input voltage value (none for P28 series)	0.001V
d32.c.E r	Number of encoder communication anomalies	This parameter can monitor the abnormal times of encoder communication after power-on.	
d33.H	Hardware model (hardware information)	This parameter monitors the drive type (hardware power information)	
d34.H1	hardware version	This parameter monitors the hardware version number	
d35.S1	software version	This parameter monitors software versions First 2 digits: FPGAversion; Last 2 digits: ARM version	
d36.C. PU	position command pulse sum	This parameter monitors the position command pulse sum (accumulated after power-up)	instruction unit
d37.F.P U	position feedback pulse summation	This parameter monitors the sum of position feedback pulses (accumulated after power-up)	instruction unit
d38. P. Er	Parameter number of value exception	This parameter can querythe exception parameter number when alarm 1 07	
d39.Ad	Advanced	This parameter queries warning codes	

u	functional exception code	when performing advanced functional exceptions	

8.4 miscellaneous function

display items	function	operation
F01.JoG	JOG commissioning	1. Press the**M key**on the operation panel to switch to the auxiliary mode**F****, operate the**Up/Down key** to**F01.JoG**, press the**ENT key** to enter the Jog operation mode. The default Jog speed is 30rpm (**P04-01 sets JOG running speed**). 2. Press the**Up button**, the motor rotates forward at 30r/min; press the**Down button**, the motor rotates backward at 30r/min. 4. Press the**M key to** exit Jog mode.
F02.run	Force enable operating speed mode	1. Press the**M key**on the operation panel to switch to the auxiliary mode**F****, operate the**Up/Down key** to**F02.run**, press the**ENT key** to enter the operation mode. 2. Press the**Up key**, the motor rotates forward, press**the Up key for a**long time, the motor speed will increase continuously; press**the Down key**, the motor rotates backward, press**the Down key for a**longtime, the motor speed will increase continuously. 3. Press the**M key to** exit this mode.
F03.Ai1	Analog Input 1 Automatic Zero Drift Calibration (VCMD)	1. Press the**M key**of the operation panel to switch to the auxiliary mode**F****, operate the**Up/Down key** to**F03.Ai1**, press the**ENT key** to display**of.Ai1**. 2. Press**ENT key for a**long timeuntil**finsh** flashes, i.e., Ai1 zero drift automatic calibration is completed. 3. Press the**M key to** exit this mode.
F04.Ai2	Analog Input 2 Automatic Zero Drift Calibration (TCMD)	1. Press the**M key**of the operation panel to switch to the auxiliary mode**F****, operate the**Up/Down key** to**F04.Ai2**, press the**ENT key** to display**of.Ai2**. 2. Press**ENT key for a**long timeuntil**finsh** flashes, i.e., Ai2 zero drift automatic calibration is completed.

<table>
<tr><td></td><td></td><td>3. Press theM key to exit this mode</td></tr>
<tr><td>F05.Ai3</td><td>Automatic zero drift compensation of current sensor</td><td>Same asF03.Ai1
Note:When performing this function, the servo must be in the OFF enable state, otherwisethe finshflashing page will not appear, and the automatic calibration cannot be completed.</td></tr>
<tr><td>F06.En0</td><td>Absolute encoder fault clearing</td><td>The auxiliary function shall be operated in the disabled state as follows
1. Press theM keyof the operation panel to switch to the auxiliary modeF**, operate theUp/Down key toF06.En0, press theENT key,clr.Ftwill be displayed.
2. PressENT keyfor a long time untilfinsh flashes to complete the absolute encoder fault clearing.
3. Press theM key to exit this mode.</td></tr>
<tr><td>F07.En1</td><td>Absolute encoder multi-turn value reset</td><td>The auxiliary function shall be operated in the disabled state as follows
1. Press theM keyof the operation panel to switch to the auxiliary modeF**, operate theUp/Down key toF07.En1, press theENT key,clr.EHwill be displayed.
2. PressENT key for alongtime untilfinsh flashes, which completes multi-turn value clearing of absolute value encoder.
3. Press theM key to exit this mode.</td></tr>
<tr><td>F10.ini</td><td>factory data reset</td><td>The auxiliary function shall be operated in the disabled state as follows
1. Enter factory reset interface: pressM keyof operation panel to switch to auxiliary modeF**, operateUp/Down key toF10.ini, pressENT key to enter
2. Select recovery parameter range: press the following table to enter the corresponding code and select the parameter range to be recovered. PressENT key for along timeand the progress bar will appear untilfinsh flashes, i.e. factory reset is completed.
<table>
<tr><td>code</td><td>implication</td></tr>
<tr><td>51</td><td>Restore Level 1 Permission Parameters</td></tr>
</table></td></tr>
</table>

		(Application Parameters) **52** Restore Level 2 Permission Parameters (Application Parameters + Motor Parameters) **55** Restore all parameters (including hidden parameters)
F11.Err	fault log display	1. Press the**M key**on the operation panel to switch to the auxiliary mode**F****, operate the**Up/Down key** to**F11.Err**, press the**ENT key** to display the historical fault information of the past 8 times. The number on the left is F0, which represents the most recent fault. 2. Pressing the **Up key**displays past faults one by one. Press**ENT key for a**long timeto display the fault occurrence time. Refer to d25.tiE for time coordinate. 3. Press the**M key to** exit this mode. **Note:**The fault occurred during multiple power ups and downs within 30 minutes may have a 30-minute deviation in recording time.
F12.clr	alarm record clearing	1. Press the**M key**on the operation panel to switch to the auxiliary mode**F****, operate the**Up/Down key** to**F12.clr**, press the**ENT key** to display**clr.Er onthe panel,** press the ENT key to clear the alarm information recorded in**F11.Err**. 2. Press the**M key to** exit this mode.
F13.unL	operation permission setting	1. Press the**M key**on the operation panel to switch to the auxiliary mode**F****, operate the**Up/Down key** to**F13.unL**, and press the**ENT key** to edit the operation authority. 0: Parameters cannot be modified;1: Parameters can be modified (except system parameters);2: All visible parameters can be modified; Set values of 0 and 1, which can be saved after power failure. When setting 2, power-off is not saved. 2. Press the**M key to** exit this mode.
F14. out	Force output port level	1. Press the M key of the operation panel to switch to the auxiliary mode **F**,** and operate the **Up/Down key** to **F14. out**, press **ENT key**, you can force the output

		port level through **Up/Down key**. The corresponding relationship with the output port is that the vertical bars of the operation panel from right to left correspond to DO1-DO4 respectively. 2. Press the**M key to** exit this mode.
F17.rES	software reset	1. Press the**M key**on the operation panel to switch to the auxiliary mode**F****, operate the**Up/Down key** to**F17.rES**, press the**ENT key** to display rESEt on the panel, press the**ENT key** to reset the software. 2. Press the**M key to** exit this mode.
F18.PJG	Program JOG	1. Press the M key on the operation panel to switch to the auxiliary mode **F****, operate the **Up/Down key** to **F18.PJG**, and press the **ENT key** to execute the program J OG function. 2. Press**UP key** or**DOWN key**, and the motor will operate according to the operating conditions set by P08-06~ P08-12. 3. Press the**M key to** exit this mode. **Note: This mode can only be operated underrdy, otherwise the driver alarms A.905**
F19.J-L	Load inertia ratio measurement	1. Press the**M key**of the operation panel to switch to the auxiliary mode**F****, operate the**Up/Down key** to**F19.J-L**, press the**ENT key to enter the** load inertia measurement function, the panel displays 1.00, press**the ENT key for a long time, and** the panel displays**-1.00.** 2. Press**UP key**, motor will run back and forth according to the number of turns set by P08-02, maximum speed set by P08-03, acceleration and deceleration time set by P08-04 and waiting time set by P08-05 until flashing load inertia ratio appears. 3. At this time, press ent to save directly to P01-04, or record this value to exit and write parameter P01-04 4. Press the**M key to** exit this mode **Note: This mode can only be operated underrdy, otherwise the driver alarms A.905**

IX Fault Analysis and Handling

9.1 Fault alarm information table

alarm type	serial number	alarm content
hardware failure	E.051	EEPROM parameter exception
	E.052	FPGA communication exception
	E.053	initial failure
	E.054	arithmetic timeout
	E.055	
	E.060	hardware match exception
	E.061	Abnormal motor and driver combination
	E.063	overcurrent detection
	E.064	Motor overcurrent detection
	E.068	Driver DC bus overcurrent detection
	E.069	FPGA clock exception
	E.071	U-phase current detection abnormality
	E.072	W-phase current detection abnormality
	E.100	parameter combination anomaly
	E.102	DI port assignment exception
	E.106	Divider output setting abnormal
	E.107	parameter anomaly
	E.108	Parameter setting out of range
	E.120	Servo ON command invalid alarm
	E.121	External input alarm signal
	E.305	Motor cable break

operation fault	E.400	Power line phase loss
	E.401	undertension
	E.402	overvoltage
	E.410	instantaneous overload
	E.412	continuous overload
	E.420	motor overspeed
	E.421	out-of-control detection
	E.430	regeneration anomaly
	E.431	regenerative overload
	E.435	surge current limiting resistor overload
	E.436	DB overload
	E.440	Drive temperature anomaly
	E.501	Excessive deviation of position
	E.503	Excessive position deviation when servo ON
	E.510	Gantry position deviation is too large
	E.511	Gantry shaft alarm
	E.520	vibrating alarm
	E.521	Self-adjusting vibration alarm
the encoder failure	E.620	encoder off-line
	E.621	Encoder built-in data mismatch
	E.622	Encoder built-in data check error
	E.641	Encoder overheating (encoder internal)
	E.643	Encoder battery voltage fault (encoder internal)
	E.644	Encoder multi-turn data exception (encoder internal)
	E.645	Encoder multi-turn count overflow (encoder internal)
	E.646	Encoder communication failure
	E.649	Encoder communication CRC failure
warning	A.900	Excessive deviation of position

	A.901	Excessive position deviation when servo ON
	A.905	Auxiliary (F**) function cannot be executed when servo is ON
	A.910	overload
	A.911	vibration
	A.912	Control panel temperature anomaly
	A.913	Drive temperature anomaly
	A.920	regenerative overload
	A.921	DB overload
	A.923	Servo unit internal fan stops
	A.930	Encoder Battery Low Voltage
	A.941	Parameter changes requiring re-powering
	A.942	EEPROM write failure
	A.950	excess of stroke
	A.960	Input terminal duplicate definition
	A.971	undertension
	A.995	Advanced assistive dysfunction

9.2 Fault alarm cause and disposal

E.051: EEPROM Parameter Exception

Fault alarm cause	fault alarm check	disposal measures
Servo unit EEPROM data exception	Perform factory initialization (F10.INI)	If it persists, replace the drive

E.052: FPGA communication anomaly

Fault alarm cause	fault alarm check	disposal measures
Power-on initialization abnormality of master MCU	powered on again	Alarm off by setting parameter Pn044 If it persists, replace the drive

E.053: Initialize failed

Fault alarm cause	fault alarm check	disposal measures
Power-on initialization failure of master MCU	powered on again	If it persists, replace the drive

E.054: Arithmetic timeout

Fault alarm cause	fault alarm check	disposal measures
arithmetic timeout	powered on again	If it persists, replace the drive

E.060: Hardware mismatch error

Fault alarm cause	fault alarm check	disposal measures
Hardware mismatch error	Perform factory initialization (F10.INI)	If it persists, contact the manufacturer

E.061: Abnormal motor and drive combination

Fault alarm cause	fault alarm check	disposal measures
The servo unit does not match the servo motor model	Check whether the servo unit supports the motor	Replace servo unit matching motor

E.063: Overcurrent detection

Fault alarm cause	fault alarm check	disposal measures
Short circuit between U,V and W	Is there a short circuit in U,V,W wiring? Is there a short circuit between R+ and R-?	correct wiring If there is no alarm, check the power line and motor for short circuit.
drive corruption	Disconnect the U,V,W cables on the drive and enable the drive	If the U,V,W connections are disconnected and the startup drive still alarms, replace the drive

E.064: Motor overcurrent detection

Fault alarm cause	fault alarm check	disposal measures
Short circuit between U,V and W	Is there a short circuit in U,V,W wiring?	correct wiring If there is no alarm, check

	Is there a short circuit between R+ and R-?	the power line and motor for short circuit.
drive corruption	Disconnect the U,V,W cables on the drive and enable the drive	If the U,V,W connections are disconnected and the startup drive still alarms, replace the drive

E.068: Driver DC Bus Over-current Detection

Fault alarm cause	fault alarm check	disposal measures
U,V,W short to earth PE	Check if wiring is correct Remove the motor power cable and try	Correct wiring, replace motor wire and motor. If it persists, replace the drive

E.069: FPGA clock anomaly

Fault alarm cause	fault alarm check	disposal measures
FPGA clock exception	FPGA clock exception	P00-47.1 Set 0 to turn off alarm If it persists, replace the drive

E.071: Abnormal detection of U-phase current

Fault alarm cause	fault alarm check	disposal measures
Current sensor sampling data abnormal	Check whether UVW wiring is correct and reliable	correct wiring P00-46.2 Set 0 to turn off alarm If it persists, replace the drive

E.072: Abnormal detection of W-phase current

Fault alarm cause	fault alarm check	disposal measures
Current sensor sampling data abnormal	Check whether UVW wiring is correct and reliable	correct wiring P00-46.3 Set 0 to turn off alarm If it persists, replace the drive

E.100: Abnormal parameter combination

Fault alarm cause	fault alarm check	disposal measures
Parameter setting error	Check set parameters	Set parameters correctly If it always appears, initialize the parameters

E.102: DI Port Assignment Exception

Fault alarm cause	fault alarm check	disposal measures
At least 2 input ports have the same function selection	Check input port function selection parameters (P06-11, P06-12...)	Set parameters correctly Perform parameter initialization, power-up again

E.106: Abnormal setting of divided pulse output

Fault alarm cause	fault alarm check	disposal measures
Frequency division pulse output parameter setting out of range	Check the Divided Pulse Output setting parameters. P03-25	Correct setting of frequency division pulse output parameters Bus encoder P03-25 65535 Drive Power Back On

E.107: Parameter anomaly

Fault alarm cause	fault alarm check	disposal measures
parameter anomaly	Check whether the parameter range is reasonable	Set parameters correctly Perform parameter initialization

E.108: Parameter setting out of range

Fault alarm cause	fault alarm check	disposal measures
Parameter setting out of range	Check whether the parameter range is	Set parameters correctly Perform parameter

	reasonable	initialization

E.120: Servo ON command invalid alarm

Fault alarm cause	fault alarm check	disposal measures
When servo is ON, power supply input port V+,GND is not powered	Check wiring and input voltage	check the wiring Drive Power Back On

E.121: External input alarm signal

Fault alarm cause	fault alarm check	disposal measures
External input alarm signal	Check whether there is signal input at the external input port and whether the relevant parameters of I/O port are correct.	Correct use of external input alarm IO signals

E.305: Broken motor cable

Fault alarm cause	fault alarm check	disposal measures
Motor cable break	Check whether UVW wiring is correct and reliable	Ensure UVW wiring is correct and reliable P00-47.0 Set 0 to turn off alarm

E.400: Loss of phase in power line

Fault alarm cause	fault alarm check	disposal measures
Main loop input power line phase loss	Check whether the main circuit input V+,GND are connected	Ensure correct wiring, use correct voltage source or series voltage regulator P00-39.0 Phase loss alarm can be turned off

E.401: Undervoltage

Fault alarm cause	fault alarm check	disposal measures
Input voltage of main circuit is lower than rated voltage or no input voltage	Check whether the main circuit input V+,GND wiring is correct, and the voltage value is what volts. Bus	Ensure correct wiring, use correct voltage source or series voltage regulator P00-52 Alarm threshold

	voltage can be monitored via d23.dcp	can be modified

E.402: Over-voltage

Fault alarm cause	fault alarm check	disposal measures
Main circuit input voltage too high	Use voltmeter to test whether the input voltage of main circuit is correct	Use the correct voltage source or series regulator
Unconnected regenerative resistor or incorrect regenerative resistor selection	Check if the appropriate regenerative resistor is connected	Correctly connect matching regenerative resistors
Incorrect parameter settings	Confirm that the parameter settings of P00-30~P00-34 are consistent with the resistor connection mode	Correct setting of parameters and external regenerative resistance
Drive hardware failure	Over-voltage alarm still exists after confirming correct input voltage	Please return to dealer or factory for repair

E.410: Transient overload

Fault alarm cause	fault alarm check	disposal measures
When the motor starts, the machine is stuck.	Check mechanical connections for jamming	Adjust the mechanical structure
P00-50 Parameter setting is unreasonable	Check P00-50 parameter values	Correct setting of P00-50 parameters
Drive hardware failure	Confirm that the mechanical part is normal and still alarm	Please return to dealer or factory for repair

E.412: Continuous overload

Fault alarm cause	fault alarm check	disposal measures
Continuous use exceeding the rated load of the drive	Monitoring can be performed via d13.oL. in monitoring mode	Change to higher power motor or reduce load

Improper control system parameter setting	1. Whether the mechanical system is installed 2. Acceleration setting constant is too fast 3. Whether the gain parameters are set correctly	1. Adjust the gain of control loop 2. Acceleration and deceleration setting time slows down
Motor wiring error	Check U, V, W wiring	correct wiring

E. 420: Overspeed

Fault alarm cause	fault alarm check	disposal measures
Input speed command too high	Check whether the input signal is normal	Adjust the frequency of the input signal
Unreasonable setting of parameters for over-speed judgment	Check whether P04-05 (overspeed alarm value) is set properly	Correct setting of P04-05 (overspeed alarm value)

E.421: Out-of-control detection

Fault alarm cause	fault alarm check	disposal measures
Motor power lines U,V,W wiring error	check the wiring	correct wiring
Incorrect motor parameter settings	Check whether P00-05; and encoder parameters are set correctly	Set parameters correctly Set P00-46.1 to 0 Close runaway detection

E.430: Regeneration anomaly

Fault alarm cause	fault alarm check	disposal measures
Wrong choice of regenerative resistor or no external regenerative resistor	Check the connection condition of regenerative resistor	If the connection is normal, please return the drive to the factory for maintenance. P0-44.2can be set
Parameter setting error	Please confirm theparameter setting ofP0-30~ P 0 -34	Set parameter values correctly

E.431: Regeneration overload

Fault alarm cause	fault alarm check	disposal measures
Wrong choice of regenerative resistor or no external regenerative resistor	Check the connection condition of regenerative resistor and whether the resistance value and power of regenerative resistor are suitable.	Select the appropriate regenerative resistor
Incorrect parameter settings	Confirm whether parameters P00-30~P00-35 are correct	Set parameter values correctly

E.435: Impulse current limiting resistor overload

Fault alarm cause	fault alarm check	disposal measures
Drive power supply frequent power-up		P0-44can be set toturn off the alarm

E.436: DB overload

Fault alarm cause	fault alarm check	disposal measures
Motor driven by external force (rdy state)	Confirm operational status	Do not use excessive force to push SetP0- 46 to close the alarm
DB, rotational energy greater than DB resistance capacity	Check motor running speed Evaluate if load inertia is excessive	Reduce servo motor command speed Reduce load moment of inertia Reduce the number of DB stops

E.440: Heat sink overheating

Fault alarm cause	fault alarm check	disposal measures
Drive internal temperature above P00-41 setpoint	Check if the drive is in good thermal condition	Improve the heat dissipation condition of the drive. If the alarm still occurs, please return the

		drive to the factory for maintenance.
Overheat alarm threshold set too low	Check parametersP0- 41	Set P0-41

E.501: Excessive positional deviation

Fault alarm cause	fault alarm check	disposal measures
Position deviation is too large, parameter setting is too small	Confirm parameter setting of P0 3-15 (excessive position deviation setting)	Increase P0 3-15 (excessive position deviation setting) setting
Gain value set too low	Confirm whether gain parameters are set reasonably	Correct adjustment of gain class parameters
Internal torque limit set too low	Confirm internal torque limit	Correct readjustment of internal torque limits
Excessive external load	Check external loads	Reduce load or replace high-power motor

E.503: Excessive position deviation when servo ON

Fault alarm cause	fault alarm check	disposal measures
Excessive position deviation when servo ON	Confirmparameter settingof P03-30, P03-31 and P0 3-3 3	Correctly set relevant parameters
Gain value set too low	Confirm whether gain parameters are set reasonably	Correct adjustment of gain class parameters
Internal torque limit set too low	Confirm internal torque limit	Correct readjustment of internal torque limits
Excessive external load	Check external loads	Reduce load or replace high-power motor

E.510: Gantry position deviation is too large

Fault alarm cause	fault alarm check	disposal measures
Gantry position deviation is too large	Confirm P03-53 parameter setting	Set parameter values correctly
Gain value set too low	Confirm whether gain	Correct adjustment of gain

	parameters are set reasonably	class parameters
Internal torque limit set too low	Confirm internal torque limit	Correct readjustment of internal torque limits
Excessive external load	Check external loads	Reduce load or replace high-power motor

E.511: Gantry shaft alarm

Fault alarm cause	fault alarm check	disposal measures
The dual axis drive, P 00-39, has an axis correlation alarm set and an axis alarm.	Check whether each axis alarms	Alarm (other alarms) troubleshooting
Two-axis drive, open gantry function, with one axis alarm	Check whether each axis alarms	Alarm (other alarms) troubleshooting

E.520: Vibrating alarm

Fault alarm cause	fault alarm check	disposal measures
Abnormal vibration of motor speed detected	Confirm abnormal sound of motor and speed and torque waveform during operation.	Reduce motor speed. or reduce speed loop gain (P02-10)
The value of the moment of inertia ratio (P01-04) is larger than the actual value or changes greatly.	Confirm load moment of inertia ratio	Set appropriate moment of inertia ratio (P01-04) P01-10 can be set to turn off the alarm

E.521: Self-adjusting vibration alarm

Fault alarm cause	fault alarm check	disposal measures
When using the adjustment-free function (factory setting), the motor vibrates excessively.	Confirm the waveform of motor speed.	Reduce the load moment of inertia ratio below tolerance, or increase the tuning value of the adjustment-free value

		setting (Fn200), or decrease the gain value.
Motor vibration is high when performing advanced autotuning, single parameter tuning, EasyFFT	Confirm the waveform of motor speed.	Steps to implement each function are described in method for treating

E.620: encoder off-line

Fault alarm cause	fault alarm check	disposal measures
Bus encoder communication failure	Check encoder wiring	correct wiring

E.621: Encoder built-in data mismatch

Fault alarm cause	fault alarm check	disposal measures
Encoder read/write exception	Check encoder wiring,	correct wiring
Abnormal motor parameter setting	Correctly set the motor parameters of P00-00~ P00-19	Set parameters correctly

E.622: Encoder built-in data check error

Fault alarm cause	fault alarm check	disposal measures
Encoder built-in data check error	Check encoder wiring Verify encoder shield wire is properly connected	If the connection is normal, please return the drive to the factory for maintenance.

E.641: Encoder overheating (encoder internal)

Fault alarm cause	fault alarm check	disposal measures
Encoder overheating (encoder internal)	Check encoder temperature	If the temperature is normal, the alarm can be cleared by F06.EN0 Modify parameter P00-07.2 Turn off alarm

E.643: Bus encoder battery failure

Fault alarm cause	fault alarm check	disposal measures
When bus encoder is set to multi-turn absolute value, external battery voltage is low	Check the voltage of external battery of encoder and confirm it is higher than 3.0V.	When the battery voltage is lower than 3.0V, replace the battery and Above 3V use auxiliary function F06.EN0 clear alarm Alarm can be switched off via parameter P00-07

E.644: Bus encoder multi-turn exception

Fault alarm cause	fault alarm check	disposal measures
Bus encoder turns out of range	The number of turns can be monitored by monitoring mode d21.ASH, and the multi-turn absolute motor cannot rotate in one direction for a long time.	Clear multiturn values using command F07.En1

E.645: Bus encoder multi-turn overflow fault

Fault alarm cause	fault alarm check	disposal measures
Bus encoder turns out of range	The number of turns can be monitored by monitoring mode d21.ASH, and the multi-turn absolute motor cannot rotate in one direction for a long time.	Alarm can be cleared via F06.EN0 Clear multiturn values using command F07.En1 Alarm can be switched off via parameter P00-07

E.646: Encoder communication failure

Fault alarm cause	fault alarm check	disposal measures
Encoder communication failure	check the encoder	Correct installation of encoder

E.649: Encoder communication CRC failure

Fault alarm cause	fault alarm check	disposal measures
Encoder communication CRC failure	check the encoder	Correct installation of encoder

A.900: Excessive positional deviation

Fault alarm cause	fault alarm check	disposal measures
Excessive position deviation warning	Confirmparameter settingofP03-15/P03-30 (excessive position deviation setting)	Increase P03-15/P 0 3 -30 (excessive position deviation setting) setting
Gain value set too low	Confirm whether gain parameters are set reasonably	Correct adjustment of gain class parameters
Internal torque limit set too low	Confirm internal torque limit	Correct readjustment of internal torque limits
Excessive external load	Check external loads	Reduce load or replace high-power motor

A.901: Excessive position deviation when servo ON

Fault alarm cause	fault alarm check	disposal measures
Excessive position deviation when servo ON	Confirmparameter settingofP03-31/P03-33	Increase P03-31/P 0 3 -33 setpoint
Pulse command frequency too high when servo ON	Pulse command frequency too high when servo ON	Reduce servo ON pulse command frequency

A.905: FN function cannot be performed when servo is ON

Fault alarm cause	fault alarm check	disposal measures
FN function cannot be performed when servo is ON	FN function cannot be performed when servo is ON	When SV-OFF, FN function is executed

A.910: Overload warning

Fault alarm cause	fault alarm check	disposal measures
overload warning	Monitoring can be performed via d13.oL. in monitoring mode	Increase P00-51 appropriately (overload warning value)
Improper control system parameter setting	1. Whether the mechanical system is installed 2. Acceleration setting	1. Adjust the gain of control loop 2. Increase acceleration

	constant is too fast 3. Whether the gain parameters are set correctly	and deceleration time
Motor wiring error	Check U, V, W wiring	correct wiring

A.911: Vibration warning

Fault alarm cause	fault alarm check	disposal measures
Abnormal vibration of motor speed detected	Confirm abnormal sound of motor and speed and torque waveform during operation.	Reduce motor speed. or reduce speed loop gain (P02-10)
The value of the moment of inertia ratio (P01-04) is larger than the actual value or changes greatly.	Confirm load moment of inertia ratio	Set appropriate moment of inertia ratio (P01-04) P01-10 can be set to turn off the alarm

A.912: Control board temperature abnormal

Fault alarm cause	fault alarm check	disposal measures
Control panel temperature anomaly	Check Drive Temperature Does the cooling fan work properly?	Improved driver heat dissipation Drive temperature alarm still under normal conditions, replace the drive

A.913: Drive Temperature Exception

Fault alarm cause	fault alarm check	disposal measures
Drive temperature anomaly	Drive temperature monitoring can be performed via d24.Ath in monitor mode	Improved driver heat dissipation Drive temperature alarm still under normal conditions, replace the drive

A.920: Regeneration overload warning

Fault alarm cause	fault alarm check	disposal measures
Wrong choice of regenerative resistor or no external regenerative resistor	Check the connection condition of regenerative resistor and whether the resistance value and power of regenerative resistor are suitable.	Select the appropriate regenerative resistor
Incorrect parameter settings	Confirm whether parameters P00-30~P00-35 are correct	Set parameter values correctly

A.930: Absolute encoder battery failure

Fault alarm cause	fault alarm check	disposal measures
Absolute encoder battery failure	Check the voltage of external battery of encoder and confirm it is higher than 3.0V.	Battery voltage below 3.0V, replace battery Use command F06.En0 to clear when above

A.941: Parameter change requires power-off and restart to take effect

Fault alarm cause	fault alarm check	disposal measures
After modifying parameters, it is necessary to power on again and the parameters will take effect.	After modifying parameters, it is necessary to power on again and the parameters will take effect.	Power off, restart.

A.960: Input terminal duplicate definition

Fault alarm cause	fault alarm check	disposal measures
Input terminal duplicate definition	Check whether there is signal input at the external input port and whether the relevant parameters of I/O port are correct.	Correctly set relevant parameters

A.971: Undervoltage warning

Fault alarm cause	fault alarm check	disposal measures

Input voltage of main circuit is lower than rated voltage or no input voltage	Check whether the main circuit input V+,GND wiring is correct, and the voltage value is what volts. Bus voltage can be monitored via d23.dcp	Ensure correct wiring, use correct voltage source or series voltage regulator P00-52 Alarm thresholds can be modified or turned off

X Communication

10.1 Modbus communication parameter setting

parameter code	**names**	**note**
P00-23	slave address	Setting range: 0-255, default 1 Set according to equipment requirements
P00-24.0	Modbus communication baud rate	Setting range: 0-7, default 2 0：2400 1：4800 2：9600 3：19200 4：38400 5：57600 6：115200 7：25600

P00-24.1	verification mode	Setting range: 0-3, default 0 0: no check, 2 stop bits 1: even check, 1 stop bit 2: odd parity, 1 stop bit 3: No check, 1 stop bit
P00-26	Modbus communication response delay	Setting range: 0-100, default 0 When the parameter is set to 0, respond according to standard communication. When the parameter is set to 0, Modbus communication response time responds according to the set time.

10.2 Modbus communication supports reading and writing parameter setting

Support reading monitoring project address list

monitoring project	**definition**	**unit**	**decimal communication address (double address, high order first)**
d00.C.PU	**position command pulse sum**	**instruction unit**	**2100-2101**
d01.F.PU	**position feedback pulse summation**	**instruction unit**	**2102-2103**
d02.E.PU	**positional deviation**	**instruction unit**	**2104-2105**
d03.C.P	**position command**	**encoder**	**2106-2107**

E	pulse sum	unit	
d04.F.PE	position feedback pulse summation	encoder unit	2108-2109
d05.E.PE	positional deviation	encoder unit	2110-2111
d06.C.Fr	input pulse velocity	Kpps	2112
d07.C.SP	speed command	rpm	2113
d08.F.SP	actual velocity	rpm	2114
d09.C.tq	torque command	%	2115
d10.F.tq	actual torque	%	2116
d11.AG.L	average load rate	%	2117
d12.PE.L	actual torque peak	%	2118
d13.oL	cumulative load factor	%	2119
d14.rG	regenerative load factor	%	2120
d15.PE.S	peak actual speed	rpm	2121
d16.I.Io	input signal monitoring	binary system	2122
d17.o.Io	output signal monitoring	binary system	2123
d18.An	mechanical angle	0.1	2124

G		limit	
d19.HAL	electrical angle	0.1 limit	2125
d20.ASS	Absolute encoder position within a single turn		2126-2127
d21.ASH	Absolute encoder turns		2128
d22.J-L	ratio of inertias	1%	2129
d23.dcp	DC bus voltage value	1Vdc	2130
d24.Ath	drive temperature	degree centigrade	2131
d25.tiE	accumulated operation time	second	2132-2133
d26.1.Fr	Vibration frequency 1	Hz	2134
d28.2.Fr	Vibration frequency 2 (end jitter frequency)	Hz	2136
d29.cn	current control mode		2137
d30.Ai1	Speed command input value	0.001 V	2138
d31.Ai2	torque command input value	0.001 V	2139
d32.c.Er	Number of encoder		2140

	communication anomalies		
d33.H1	**Hardware model (hardware information)**		**2141**
d34.H2	**hardware version**		**2142**
d35.S1	**software version**		**2143**
d36.C.PU	**position command pulse sum**	**instruction unit**	**2144-2145**
d37.F.PU	**position feedback pulse summation**	**instruction unit**	**2146-2147**
Current Fault Number			**2180**

Note: 1. All parameters support 485 reading, parameter read-write address refers to parameter code: such as P03-09, read-write address is decimal 309

2. Parameter write reference drive permission settings. For example, if the current permission level of the drive is 1, it cannot write parameters higher than permission 1. Parameters written are not saved when power is off.

10.3 Modbus communication protocol overview

10.3.1 Introduction

Nexus monitors communicate with other devices using the RTU transfer mode of the AEG Modicon Modbus protocol. This communication is compatible with both RS-232 and RS-485 standards.

RS-232 communication requires a Nexus monitor and a single connection to other devices, using only channel 1 to the Nexus monitor.

RS-485 supports multiple Nexus monitors connected to a network, is a two-wire

connection, up to 115200 baud, ports 1-4 are available.

10.3.2 Communication packets

Communication occurs between a Modbus master and one or more Nexus slaves. The master initiates all communications by sending a "request packet" to the designated slave, which replies with a "reply packet." Communication packets are arranged in a string of 8 bytes as follows:

·From address, one byte

·Function code, one byte

·Data, N bytes, high byte first, low byte last

CRC (RTC Error Detection Code), 2 bytes

Dead time, 3.5 bytes transfer time.

A single packet can send up to 127 registers.

10.3.3 From Address and Send Requests

Each slave device on the communication bus has its own dedicated address, responding only to addresses addressed by the master. The packet returned to the master has the same address in the slave address field as the request packet. These addresses are programmable and range from 0 to 255.

Slave address 0 is a transfer command that allows the master to send the same packet to all devices at once. All slaves follow the packet's instructions but do not respond. Transfer requests are only useful for functions 6 and 10, which represent presetting a single register and presetting multiple registers, respectively. See Tables 1.3 and 1.4.

10.4 function number

The function number of a packet tells the addressed slave what action to perform. Nexus supports the following Modus function numbers.

table 1.1 function number

function number		describe
16-ary	decimal	
03H	3	read hold register
06H	6	preset single register
10H	16	Preset multiple registers

10.4.1 Function No. 03: Read hold register

This function allows the master to read one or more parameter values (data registers) from a Nexus slave. This data register is a 16-bit value transmitted in the format "Big Endian." High bytes read first, low bytes read later.

BIG-ENDIAN means that the low byte is arranged at the low end of the memory, and the high byte is arranged at the high end of the memory.

The master sends a packet defining a start register for the slave and the number of registers to read. The slave responds with a packet containing the requested parameter values within the range specified in the original request.

In the following example, the master device requests a slave at 01 to send the values in two registers, starting with register 00001, and the slave replies with the values 3031H and 3037H from registers 00001 and 00002.

Host sending format:

Slave address Function number Data number read from start address CRC

Slave sending format:

Slave address function number byte number value CRC of each data

table 1.2 Function Number 03 Example

host package definition	hexadecimal address	Slave package definition	hexadecimal address
slave address	01H	slave address	01H
function number	03H	function number	03H

data start address high byte	00H	number of bytes	04H
data start address low byte	01H	Data 1 High Byte	30H
Number of registers high byte	00H	Data 1 Low Byte	31H
Register Number Low Byte	02H	Data 2 High Byte	30H
CRC low byte	95H	Data 2 Low Byte	37H
CRC High Byte	CBH	CRC low byte	F1H
		CRC High Byte	2AH

10.4.2 Function No. 06: Adjust individual registers

This feature allows the master to modify a single register on the Nexus slave. The data register is a 16-bit value, with high bytes transferred first and low bytes transferred later. In the following example, the master device holds the value 0001H in register 57346 (E002) in the Nexus slave with address 01H.

Host sending format:

Slave Address Function Number Data Start Address Data Value CRC

Slave sending format:

Slave Address Function Number Data Start Address Data Value CRC

Table 1.3 6 Examples of Function Numbers

host package definition	hexadecimal address	Slave package definition	hexadecimal address
slave address	01H	slave address	01H
function number	06H	function number	06H
data start address high byte	E0H	data start address high byte	E0H

data start address low byte	01H	data start address low byte	01H
high byte of data	00H	high byte of data	00H
low byte of data	01H	low byte of data	01H
CRC low byte	2EH	CRC low byte	2EH
CRC High Byte	0AH	CRC High Byte	0AH

10.4.3 Function No. 10: Adjust Register

This function allows the master to modify a contiguous set of registers on the Nexus slave. The data register is a 16-bit value, with the high byte being transferred first and the low byte being transferred later.

In the following example, the master device holds the value 0001H in register 57345, the value 0001H in register 57346, and the value 0001H in register 57347 in the Nexus slave with address 01H.

Host sending format:

Slave address Function number Data start address Number of modified data First data…… CRC

Slave sending format:

Slave address Function number Data start address Number of modified data CRC

10.4.4 Data start address

Hexadecimal range: 0000H-FFFFH

Decimal range: 0001-65535

For example, for some Scada software, in order to read the value in the save register, the address format should be 4 (XXXXX),XXXXX is the decimal address.

table 1.4 Function number 10 example

host package definition	hexadecimal	Slave package definition	hexadecimal

	address		address
slave address	01H	slave address	01H
function number	10H	function number	10H
data start address high byte	E0H	data start address high byte	E0H
data start address low byte	01H	data start address low byte	01H
Number of Set points High Byte	00H	Number of Setpoints High Byte	00H
Set Point Number Low Byte	03H	Set Point Number Low Byte	03H
number of bytes	06H	CRC low byte	E6H
Data 1 High Byte	00H	CRC High Byte	08H
Data 1 Low Byte	01H		
Data 2 High Byte	00H		
Data 2 Low Byte	01H		
Data 3 High Byte	00H		
Data 3 Low Byte	01H		
CRC low byte	4DH		
CRC High Byte	46H		

10.5 dead-time

Nexus slaves consider data reception to be complete if they do not receive data from the master within a transmission time of 3.5 bytes (approximately 7ms at 4800 baud and approximately 300us at 115200 baud). If the delay between two bytes in the transmission process of the master is greater than this time, the slave considers it dead time. So the conclusion from the dead time is that all unaddressed slaves pay attention to new packets coming from the host.

10.6 Response to Exception Program

If the slave encounters an illegal command or other problem while executing the master command, an exception response packet is sent to the master. The exception response packet contains an error code to indicate the type of error.

The following table shows the error codes and corresponding error types.

Table 1-5 Error Codes and Types

error code	type of error	explain
01	illegal function number	Slave does not support function number in request packet
02	illegal address	The slave does not recognize the address of the data field in the transmitted request packet
03	illegal data	The data mentioned in the transfer request packet is not supported by registers in the Nexus slave
06	Busy, refuse package	Slave is busy performing long operation and cannot receive request packet

In the following example, the master device requests the value in the slave transmit register 00256 at address 01H, and the slave sends an error response message indicating that it is busy.

Table 1.6 Example Exception Response

host package meaning	hexadecimal address	Slave package meaning	hexadecimal address
site	01H	site	01H
function number	03H	function number	03H
data start address high byte	01H	error code	06H
data start address low	00H	CRC low byte	C1H

byte			
Number of registers High byte	00H	CRC High Byte	32H
Number of registers Low byte	01H		
CRC low byte	85H		
CRC High Byte	F6H		

XI Special Functions

11.1 absolute encoder usage

11.1.1 Description of functions

Using servo motors with absolute encoders, absolute value detection systems can be constructed by upper devices. By means of absolute value detection system, it is no longer necessary to carry out the home reset operation every time the power is turned on. This function reads the number of turns and position data of absolute encoder based on MODBUS communication, and the upper device processes and controls to realize the related functions of absolute encoder.

11.1.2 MODBUS-based communication servo basic settings and instructions

The encoder battery alarm and number of revolutions data are initialized when the system using absolute value encoder is put into use(F06.En0 clears encoder alarm;F07.En1 clears absolute value encoder multi-turn value). Because the motor body

is disconnected from the battery before the first use, the encoder will have no battery alarm and loop memory function.

parameter code	name	explain
P00-23	slave address	Setting range: 0-255, default 1 Set according to equipment requirements
P00-24.0	Modbus communication baud rate	Setting range: 0-7, default 2 0：2400 1：4800 2：9600 3：19200 4：38400 5：57600 6：115200 7：25600
P00-24.1	verification mode	Setting range: 0-3, default 0 0: no check, 2 stop bits 1: even check, 1 stop bit 2: odd parity, 1 stop bit 3: No check, 1 stop bit

11. 1.3Absolute data address based on MODBUS communication

content	Address: decimal	remark
Absolute encoder position within a single turn	2126-2127	Single-turn numerical range: 0-8388608
Absolute encoder turns	2128	Multi-turn value range: 0-65535

11.1.4 Absolute encoder related alarm processing

alarm	Fault alarm cause	fault alarm check	disposal measures

codes			
E.643	When bus encoder is set to multi-turn absolute value, external battery voltage is low	Check the voltage of external battery of encoder and confirm it is higher than 3.0V.	Replace battery and clear alarm via F06.EN0 (see Chapter 8.4)
E.644 E.645	Read abnormal multi-turn data, or turn value exceeds ±32768	Check d21.ASH (see Chapter 8.3) for multi-turn values	If the multiturn value is greater than 32767, clear the multiturn data via F07.EN1 (see Chapter 8.4)
A.930	Absolute encoder battery failure	Check encoder external battery voltage	Replace battery and clear alarm via F06.EN0 (see Chapter 8.4)

11.1.5 Absolute encoder battery replacement

To avoid absolute position data loss, please replace the battery if any of the following conditions occur in the drive.

1. When the driver displays A.930, it represents a low battery voltage warning. The battery must be replaced in time to avoid loss of absolute position data of the motor. After replacing the battery, use the auxiliary function F06.EN0 to clear the alarm.
2. When the driver displays E.643, it indicates that the battery voltage is low alarm. When this alarm occurs, the motor cycle data cannot be recorded normally, and the battery must be replaced immediately. After replacing the battery, use the auxiliary function F06.EN0 to clear the alarm after replacing the battery, and check the origin of the equipment at the same time. At the same time, use the auxiliary function F07.EN1 to clear the motor multi-turn data

Note: It is recommended to replace the battery under the condition that the drive is energized to avoid the loss of absolute position data.

Contact Us
Questions or Concerns? Hit us up with any questions about your order.
Our Customer service team is ready to assist you.
Working Hours:Monday – Friday: 9:30 a.m. to 5:30 p.m. (UTC+8);

E-mail:

support@oyostepper.com

TELL: +86-023-68438829

Official Site:https://www.oyostepper.com